AGENDA

Planning and Zoning Commission

July 2, 2025 – REGULAR MEETING

5:30 PM

The New Business items have been placed on the agenda in the order they were received. Please note that at 8:00 p.m., the Commission will evaluate the remainder of the agenda to determine if time constraints will permit the full agenda to be heard at this meeting. All items not heard at this meeting will be postponed to the next regularly scheduled Planning Commission Meeting.

NOTICE: THE VIDEO AND AUDIO FOR THIS MEETING ARE STREAMED TO THE PUBLIC VIA THE INTERNET AND MOBILE DEVICES WITH VIEWS THAT ENCOMPASS ALL AREAS, PARTICIPANTS AND AUDIENCE MEMBERS

PLEASE SILENCE ALL ELECTRONIC DEVICES DURING THE MEETING

1. ZOOM LINK FOR PUBLIC PARTICIPATION To join, click link or copy it to your browser:

   https://us02web.zoom.us/j/88045852781?pwd=FQAGM2uKYvENsRGTC0hMyDvsdjaYJ8.1

   Or join at zoom.com with Webinar ID: 880 4585 2781 and Password: 83001

The Town reserves the right to close Public Comment via Zoom at any time. In-person comment will continue to be taken and written comments can always be submitted to the Planning Department at planning@jacksonwy.gov.

2. CALL TO ORDER
3. ROLL CALL
4. PLEDGE OF ALLEGIANCE
5. MATTERS FROM THE PUBLIC
6. APPROVAL OF MINUTES
   I. June 18, 2025 Planning Commission Meeting Minutes
7. NEW BUSINESS
   I. P25-038 139 N Cache Street
      Browse N' Buy Development Plan
8. MATTERS FROM THE COMMISSION
9. MATTERS FROM STAFF
10. ADJOURN

MINUTES
PLANNING AND ZONING COMMISSION
TOWN OF JACKSON, WYOMING
June 18, 2025
UNAPPROVED

The Planning and Zoning Commission met in a regular session on June 18, 2025, in the Town Council Chambers located at 150 E. Pearl Ave. in Jackson, at 5:30 pm. This meeting was held in person and via Zoom.

Upon roll call the following were found to be present:

BOARD: Katie Wilson, Thomas Smits, Georgie Stanley, Abigail Petri, and Anne Schuler appeared in person. Stephanie Wise appeared via Zoom.

STAFF: Paul Anthony, Tyler Valentine, Mary Tippetts

APPROVAL OF MINUTES:
A motion was made by Commissioner Wilson and seconded by Commissioner Schuler to approve the June 4, 2025, Planning Commission Meeting minutes. Commissioner Smits called for the vote. The vote showed all in favor and the motion carried.

MATTERS FROM THE PUBLIC: None.

NEW BUSINESS: P25-019 180 S King Street Sketch Plan

STAFF PRESENTATION:
Staff provided an overview of the project. The project is located in the P/SP zone, which is not effected by the big building moratorium. The requested action is combining the current Courthouse and Jail into one 79,950 SF, three story building. The Hansen Courthouse and General Services building will remain. The P/SP zone has no setbacks, no limits on stories or height, no FAR, and no max building size, but does require the building to fit in with the neighborhood character & context. Staff support site design with conditions related to landscaping, snow storage, a two-way alley, construction staging, pedestrian improvements, main parking lot curb cut, signage/wayfinding, secured parking lot access, and parking impacts during construction.

Applicant calculated a need of 91 parking spaces, which staff support. To accommodate growth and Town parking requirements, applicant proposed 120 spaces. Condition #6 would remove four spaces, leaving the project with 116 spaces, which staff feel is appropriate.

The Design Review Committee agreed that the design was handsome but had major concerns about whether the scale and massing are appropriate for the neighborhood and whether the building overwhelms the pedestrian scale, and felt the building was overbearing and imposing at the pedestrian level. They requested more additive/subtractive moves, breaking up the roofline and using setbacks. Ultimately, the project was recommended approval by a 4-3 vote.

Staff recommends approval based on ten conditions.

QUESTIONS FOR STAFF:
The future use of the Hansen Courthouse is discussed. The Commission would like to see floorplans if they are able pursuant to Wyoming State Statute.

APPLICANT PRESENTATION:
Jason Berming with Wember addresses the Commission. The history of the project is reviewed and the upcoming schedule is explained. Stephan Hall with Anderson Mason Dale addresses the Commission. The project aims to be functional, safe, secure, and welcoming. It aims to be a civic presence. The applicant is comfortable with the proposed conditions and will consider those. The elevations are presented.

Mark Newcomb, Teton County Commission Chair, addresses the Commission. The Teton County Commission understands there are many items to balance and want to create a civic space.

Dick Stout, Teton County Attorney, and Anne Sutton, Clerk of Teton District Court, address the Commission regarding the county's needs.

QUESTIONS FOR APPLICANT:
Commission clarifies the egress of the secured parking, the additional curb cut on Willow, snow storage, and the feasibility of a two-way alley.

PUBLIC COMMENT:
None.

COMMISSION DISCUSSION:
The Commission clarifies that their role is to determine if projects meet the requirements of the LDRs. The Commission agrees that this project meets the requirements of the LDRS and conforms with the comprehensive plan. Regarding building and site design, the Commission is split between agreeing with Staff analysis that the project meets the design criteria. The Commission agrees with Staff analysis regarding vehicular access and circulation, phasing/construction management plan/temporary displacement, traffic analysis provided, the parking calculations and requirements, pedestrian improvements and landscaping as detailed in the staff report.

Staff finds that the findings required to approve the sketch plan are met as outlined in the staff report.

The Commission is generally happy with the building but wishes it could have gone further and included more of the site to include the entire block of government buildings. They believe it is close to a well-considered master plan, but not entirely. The Commission agrees that the project meets the LDRs and comprehensive plan.

MOTION:

A motion was made by Commissioner Schuler and seconded by Commissioner Smits to recommend approval of Sketch Plan P25-019 for a new +/-80,000 sf Justice Center for Teton County, which will house the District and Circuit Courts, Sheriff's Office, County Attorney's Office, Clerk of Court, 911 Dispatch Center, County Jail, and associated office and storage areas located at 180 S. King Street, based upon the findings and conditions presented in the staff report, the departmental reviews, and subject to this staff report dated June 18, 2025. Commissioner Smits called for the vote. The vote showed all in favor and the motion carried unanimously.

MATTERS FROM THE COMMISSION:
Staff and the Commission thank Commissioner Petri for her service on the Planning Commission.

MATTERS FROM STAFF:
Staff gives updates on the upcoming Planning Commission meetings; items include Browse n' Buy Development Plan, Wireless CUP renewals, a Zoning Map Amendment at Swan Creek, and a Variance at Upper Cache Creek.

ADJOURN: A motion was made by Commissioner Schuler and seconded by Commissioner Stanley to adjourn the meeting. Commissioner Smits called for the vote. The vote showed all in favor and the motion carried. The meeting adjourned at 7:30 pm.

minutes:mt

STAFF REPORT

Meeting Date:	July 2, 2025	**Meeting Title:**	Planning Commission
Submitting Department:	Planning Department	**Presenter:**	Katelyn Page
Agenda Item:	P25-038 Development Plan for a 2-story mixed use development at the property addressed 139 N. Cache Street	**Public Comment:**	Yes

Purpose & Policy Considerations.
A Development Plan is required in the Town Square-2 (TS-2) zoning district by the Town of Jackson Land Development Regulations (LDRs) for projects with qualifying floor area of 10,000 sf or more. Planning Commission review at a public hearing and recommendation is required.

Requested Action.
The applicant is requesting approval of a Development Plan for an approximate 22,000sf commercial and residential mixed-use development at the property addressed 139 N. Cache Street and associated site development at 170 N. Glenwood Street.

Recommendation.
The Planning Director recommends **approval** of a Development Plan for an approximate 22,000sf commercial and residential mixed-use development at the property addressed 139 N. Cache Street and associated site development at 170 N. Glenwood Street subject to the departmental reviews attached hereto, this staff report, and the following conditions:

1. As part of the Building Permit submittal, the applicant shall provide a revised site plan with a parking lot design compliant with LDR Sec. 6.2.5.D, that provides a minimum of two vehicle parking spaces for the ARUs, wheel stops for all parking spaces along the north side of the parking lot, and that provides a minimum clear width for any required ADA accessible routes from the parking lot to the new structure.

2. As part of the Building Permit submittal, the applicant shall provide a site plan with compliant structure setback of 0'-5' (min.-max.) as measured to the back of the pedestrian frontage for the proposed parking screening wall.

3. As part of the Building Permit submittal, the applicant shall provide a site plan with compliant pedestrian frontage width of 13.5' (min.) designed to the satisfaction of the Town Engineer – including 6' (min.) clear sidewalk and a furnishing zone comprised of either pavers or lawn – for the portion of the N. Glenwood St. frontage immediately adjacent to the off-street parking facility.

4. As part of the Building Permit submittal, the applicant shall provide a site plan that indicates the location of the proposed structure in relation to existing interior lot lines of the Property.

5. Prior to issuance of building permit, the Property owner is required to record a Partial Vacation Without Replat with the Teton County Clerk to vacate interior lot lines over which the proposed structure spans.

6. Prior to issuance of the Building Permit, the applicant shall obtain the necessary encroachment agreement from WYDOT for the proposed canopy and balcony along the eastern frontage of the structure.

7. Prior to issuance of the Building Permit, the applicant shall record with the Teton County Clerk an encroachment agreement from the Town of Jackson for the proposed canopy and balcony that encroach along the eastern frontage of the structure.

8. Prior to issuance of certificate of occupancy, a public access easement for the portions of the N. Glenwood Street and N. Cache Street pedestrian frontages located on the Property shall be provided by the Property owner to the Town and recorded with the Teton County Clerk.

9. Prior to issuance of the Building Permit, the applicant shall amend the approved landscape plan for the Property to demonstrate compliance with compliance with CUP P20-162 and to document any landscape modifications that result from Development Plan P25-038.

10. With the Building Permit submittal, the applicant shall provide final water system and sanitary sewer analyses based on direction from the Town Engineer.

11. Prior to issuance of the Building Permit, the applicant shall remit fee-in-lieu payment for partial affordable workforce housing units based on final floor area calculations included with the Housing Mitigation Plan submitted with the building permit, meeting the satisfaction of the Jackson Teton County Housing Department.

12. Prior to issuance of certificate of occupancy, the property owner is required to record with the Teton County Clerk affordable deed restrictions for two ARUs that meet the satisfaction of the Jackson Teton County Housing Department.

13. With the Building Permit submittal, the applicant shall provide a floor plan of the existing structure that identifies the location and floor area amount of all existing uses to account for the proposed 1.107-unit housing credit. A fee-in-lieu payment for mitigation of any partial units shall be made prior to issuance of building permit.

14. With the Building Permit submittal, the applicant shall provide proposed floor plans that remove internal connection(s) between the two proposed ARUs.

15. Within six months of issuance of the Certificate of Occupancy, all existing uses that were temporarily relocated on the Property during construction shall be moved into the new structure.

Key Policy Questions.

- Does the Planning Commission support the applicant's proposed modifications to the nonconforming parking lot in order to comply with LDR Sec. 6.2.5 (Parking Facility Dimensions)?

Project Location.

The property is located at 139 N. Cache Street and 170 N. Glenwood Street ("Property") and legally known as LOTS 6, 7, 14, and 15 BLK 7, JACKSON ORIGINAL TOWNSITE (22-41-16-28-4-09-005.1 and 22-41-16-28-4-09-005) respectively. An aerial photo and zoning map are shown below:

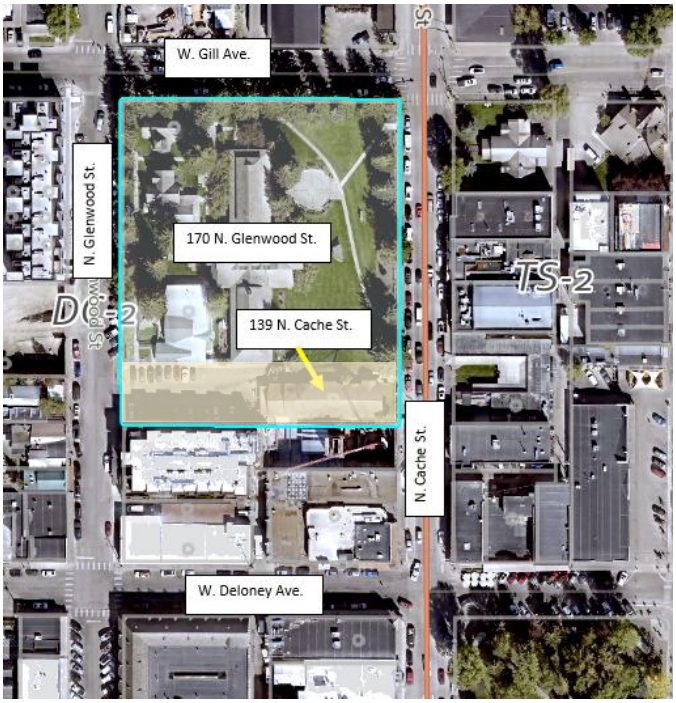

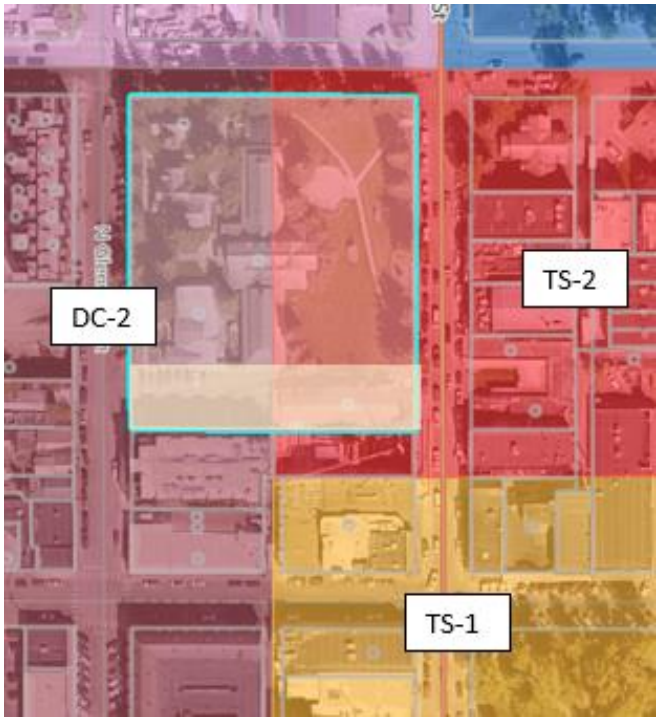

Background.
The Property, home to St. John's Episcopal Church, is 2.4 acres (approximately 105,000sf) in area and fronts three streets: N. Cache Street to the east, W. Gill Avenue to the north, and N. Glenwood Street to the west. The property is split-zoned with the eastern half in the Town Square (TS) and the western half in the Downtown Core-2 (DC-2). The site has five structures which include the main church and fellowship hall, existing Browse N Buy building, and three other ancillary buildings including the original chapel. The original church was founded in 1911 with subsequent expansion to the church facility in 1994.

The existing Browse N Buy structure is approximately 5,000sf, located at the southeast corner of the St. John's campus in the TS-2 zone, and addressed 139 N. Cache Street. The adjacent parking facility, shared by all uses on the church campus, is in the DC-2 zone, and is addressed 170 N. Glenwood Street.

<u>1994 Conditional Use Permit and Parking Variance</u>
On February 22, 1994, the Town Council approved a Conditional Use Permit and Parking Variance (Items 94-01.1) for an 11,000sf expansion of the main fellowship hall and 30 off-street vehicle parking spaces where 35 were required under the LDRs at that time. As part of that CUP, the approved landscape plan provided 13 new Cottonwood trees, 13 Spruce trees, 10 Crabapple or Aspen trees, and several small to large shrubs on the east, north and west sides of the site.

At the time of the 1994 CUP and Variance approvals, the Browse N Buy structure at 139 N. Cache Street was already in existence and, based on limited Town records, was considered ancillary to the broader church use (Institutional use) at that time.

<u>Landscape Plan Amendment and Tree Removal</u>
On April 30, 2018, the Town Planning Director approved a Tree Removal Request (P18-123) to remove 3 Cottonwood trees along N. Glenwood Street that were part of the 1994 landscape plan and replace them with 3 new trees. The request was made because a Cottonwood fell over during high winds and there was concern that 2 other Cottonwoods nearby would also fail during high winds.

On October 19, 2020, the Town Council approved a CUP Amendment (P20-162) to address further landscape plan modifications due to continued declining health of Cottonwood trees on the Property. The final letter of approval and landscape plan, including a phasing plan for tree installation to coincide with construction of the new Browse N Buy structure currently under review, are included as attachments to this staff report.

Project Description.
<u>Overview</u>
For simplicity, both staff and applicant commonly refer to the proposed structure as the Browse N Buy structure even though it will accommodate other residential and commercial uses.

The proposed development consists of demolishing the existing 5,000sf Browse N Buy structure and constructing a new, two-story structure totaling 21,700sf. Additional site work proposed includes reconstruction of the pedestrian frontage and boardwalk surface along the N. Cache Street (WYDOT right-of-way (ROW)),

modifications to the off-street parking facility, modifications to the pedestrian frontage along the N. Glenwood St., and introduction of a screening wall and pedestrian entrance gate along N. Glenwood Street.

Proposed uses include approximately 12,000sf retail, 2,000sf office, 1,500sf service, two Accessory Residential Units (ARUs), and shared circulation floor area. The expansion – not including the exempt floor area of the deed restricted ARUs – represents a 49% increase in total habitable floor area of the entire St. John's campus and will accommodate Browse N Buy retail store as well as other community partners such as Jackson Cupboard/One22 Resources, and Recovery Community. A detailed tabulation of proposed floor area and uses are found on page 7 and 27 of the applicant's submittal (attached).

Building Design and Pedestrian Frontages

The proposed structure is primarily within the TS-2 zone with a portion of the waste and recycling enclosure, surface parking facility, utilities, and parking screening wall located in the DC-2 zone. The primary pedestrian access to the new structure is from the N. Cache St. pedestrian boardwalk with vehicular access from N. Glenwood Street. Maximum height of the two story structure is 40' at the stair tower roof access, 35' at N. Cache St., and 38' at the interior of the property near the parking facility. The majority of the structure is located with a 0' interior side setback at the southern property line, except at the waste and recycling enclosure, where a 5' (min.) setback is provided.

A covered sidewalk with boardwalk surface is proposed along the N. Cache St. WYDOT ROW. A 2nd story cantilevered balcony and roof canopy extend beyond the eastern property line and into the WYDOT ROW approximately 5'-3" and 2' respectively.

On the N. Glenwood St. frontage adjacent to the parking facility, the curb location will be relocated approx. 2'-3' west to align with the curb at neighboring property at 120 N. Glenwood St (Hotel Jackson). Additionally, a wall structure will provide screening to the existing surface parking lot.

Off-Street Parking Facility

The applicant proposes reconfiguration of the existing nonconforming surface parking lot (which has 21 spaces) to comply with required parking setback and parking space dimensions and to accommodate a waste and recycling enclosure, electrical transformers, and eight covered bicycle parking spaces. As proposed, the modified parking facility accommodates 15 vehicle parking spaces, two of which are dedicated to the ARUs.

Affordable Workforce Housing

The applicant proposes two on-site deed restricted ARUs – one 2-bedroom 1,025sf unit and one 1-bedroom 828sf unit – plus a remaining fee-in-lieu payment to fulfill affordable workforce housing mitigation generated by the development. As mentioned above, each unit will include one dedicated off-street vehicle parking space in the parking facility that is accessed from N. Glenwood Street.

Interim Operations Relocated During Construction

Based on staff discussion with applicant team, current operations of the Browse N Buy retail and Recovery Community will temporarily relocate on the St. John's campus but remain operational for the duration of construction. Browse N Buy retail use will occupy 2,680sf in the southwest structure on the campus and

Recovery Community office use will occupy 990sf in the structure immediately south of the original chapel. As noted on the construction management site plan, five parking spaces in the existing off-street facility will remain available for Browse N Buy patrons to facilitate donations. Staff do not provide further analysis these interim operations below but includes a recommended condition of approval that all relocated interim operations shall be relocated into the new structure within six months of certificate of occupancy.

Staff Analysis.

Overview

The purpose of a Development Plan is to review a physical development that is large and complex enough to benefit from a public review to determine compliance with these LDRs prior to preparation of final construction.

As conditioned, Staff find that the proposed Development Plan complies with the applicable LDR requirements for the TS-2 and DC-2 zones and aligns with the intent of these zones to support a vibrant, mixed-use area that features a variety of uses and amenities, including wide sidewalks and buildings located close to the pedestrian frontage.

It is helpful to recognize that the St. John's campus – like many Institutional uses including churches, community centers, and libraries – often provide a wide variety of community-facing services in response to evolving public needs. Under LDR Sec. 6.1.1.B, uses may be classified as principal, incidental, accessory, primary, or temporary and may shift between those classifications over time. Given St. John's 100-plus year history on the Property, changes in the type, intensity, and classification of these uses often occurred without formal documentation, making them challenging to track over time.

Thus, staff's analysis for aspects like parking and housing mitigation rely on clear documentation when available – such as the case with CUP and Variance 94-01.1. Otherwise, staff's analysis focuses on establishing and documenting the existing use at this point in time and considering the net impact or change moving forward.

Required Compliance for Non-Building Nonconformities.

The proposed expansion – not including the exempt floor area of the deed restricted ARUs – represents a 49% increase in the existing habitable floor area on the entire St. John's campus property thus requires compliance for non-building nonconformities per LDR Sec. 1.9.2.B.5 (Required Compliance for Nonbuilding Nonconformities) – namely, 1) the parking setback from N. Glenwood St., 2) the 13.5' (min.) pedestrian frontage immediately adjacent to the parking facility, and 3) the minimum parking lot dimensions. Staff recommend the conditions of approval below addressing compliance with non-building nonconformities based upon the proposed amount of increased habitable floor area at the Property.

Off-Street Parking Space Dimensions (Condition #1)

Under the current LDRs, off-street parking is only required for the two vehicle spaces required for the ARUs, all other proposed commercial uses can meet their parking demand either with existing credits or by paying a fee in lieu. The existing off-street parking lot shared by all uses on the St. John's campus has spaces that are nonconforming to required length (i.e., vehicle space length plus drive aisle width) as it provides approximately 57' where 64' is required for two rows of parking with a drive aisle. To address this issue, the applicant proposes to not only remove some parking spaces to accommodate a new waste

and recycling enclosure and utilities, but to provide a compliant 24' drive-aisle width by reducing the length of the parking spaces from 20' to 18'. In essence, the applicant is proposing to leave the existing 18' parking spaces on the north side of the lot and allow vehicles to encroach over the existing sidewalk to a point that access is narrowed in some places around 2'-3' between vehicle overhangs and existing structures.

Reducing the length of the parking spaces from 20' to 18' is permitted by LDR Sec. 6.2.5.D.1.b.ii (Over hang with wheel stop), provided that wheel stops are installed and the vehicle overhangs do not reduce the width of an adjacent ADA walkway to less than 4' in width. Staff's interpretation of LDR Sec. 6.2.5.D.1.b.ii is that the 4' (min.) clear sidewalk is only required at walkways used as ADA accessible routes.

Thus, because the adjacent walkway on the north side of the parking lot is not an ADA route to the new structure, the fact that some of the adjacent parking spaces will reduce its width to less than 4' is not a regulatory concern for Staff. It is also not a practical concern because this is the same situation that currently exists with cars overhanging into the walkway, so nothing is really changing from current conditions in this part of the parking lot. In summary, Staff recommend a condition of approval that, with building permit submittal, the applicant shall provide a revised site plan with parking facility design compliant with LDR Sec. 6.2.5.D, that provides a minimum of two vehicle parking spaces for the ARUs, wheel stops for all parking spaces along the north side of the parking lot, and that provides a minimum clear width for any required ADA accessible routes from the parking lot to the new structure.

<u>Parking Setback and Screening Wall (Condition #2)</u>
The applicant proposes a 7.5' tall parking screening wall consisting of concrete pillars and wooden slates to reduce the visual impact of the existing surface parking lot accessed from N. Glenwood Street. Staff determine that construction of the parking screening wall meets the screening intent provided by buildings for the purposes. This means that, upon construction of the screening wall, staff consider the parking facility compliant with a 0' parking setback without the need for asphalt hatching (as shown in the current proposed site plan) and curb stop obstructions that create a "no parking" area at the entrance to the parking lot. This means that parking may be located closer to the screening wall than currently shown on proposed site plan *so long as compliant parking stall dimensions can be accommodated.* That said, staff note the location of the proposed parking screening wall will shift approximately 4" east to accommodate the required pedestrian frontage width described below. Staff recommend a condition of approval that, with building permit submittal, the applicant shall provide a site plan with screening wall compliant with the DC-2 structure setback of 0'-5' (min.-max.) as measured to the back of the pedestrian frontage.

<u>Pedestrian Frontage Along N. Glenwood Street (Condition #3)</u>
The existing pedestrian frontage along N. Glenwood St. does not meet the required 13.5' (min.) width or frontage type specified in the DC-2 zone. The DC-2 zone requires pedestrian frontage types of either covered walkway (13' min. width) or trees-in-grates (13.5' min. width). However, incorporating trees-in-grates is not practical as it introduces sight obstructions for vehicles exiting the parking lot. Staff determine that utilizing a detached 6' clear sidewalk with 5' furnishing zone of either pavers or lawn is

appropriate based on that constraint. Additionally, as the existing pedestrian frontages directly north and south will remain unchanged, the final design of the reconstructed pedestrian frontage will need appropriately "tie into" the existing sidewalks and may require tapering the sidewalk width or breaking up the total furnishing zone width on either side of the sidewalk to accommodate safe sidewalk connections. Thus, staff recommend a condition of approval that, with building permit submittal, the applicant shall provide a site plan with compliant pedestrian frontage width of 13.5' (min.) designed to the satisfaction of the Town Engineer – including 6' (min.) clear sidewalk and a furnishing zone comprised of either pavers or lawn – for the portion of the N. Glenwood St. frontage immediately adjacent to the off-street parking facility.

Vehicle Parking Amount

While note proposed by the applicant, staff find the development is able to meet required vehicle parking in the TS-2 and DC-2 zones through use of shared parking allowed by LDR Sec. 6.2.2.B (Shared Parking). Staff parking calculations are provided with department reviews attached.

Based on staff analysis, a total of 111.10 vehicle parking spaces are required for all existing and proposed development at the St. John's campus. Based on the current floor area calculations, the expanded floor area requires 31.26 vehicle parking spaces in total including a minimum of two off-street vehicle parking spaces required for two ARUs.

A total of 109.48 spaces are available to the Property through a combination of 45 on-street spaces, 49.48 spaces associated with the 1994 Downtown Parking Study, and 15 spaces in the proposed off-street parking facility. This leaves a 1.62 space deficit. However, staff determined the parking requirement may be met through use of shared parking between Affordable Working Housing units and the nonresidential uses on site as allowed by LDR Sec. 6.2.2.B (Shared Parking).

Parking Required - CUP and Variance 94-01.1

Staff notes that under the LDRs at the time, the 1994 expansion of the church facility (CUP and Variance 94-01.1.) required 30 off-street vehicle spaces. Staff determine that while the amount of spaces is applicable, the off-street *location* stipulated by that approval is outdated. Under the current LDRs, the 30 vehicle spaces may be fulfilled a variety of different methods including on-street, off-street, parking credits, or fee-in-lieu payment. Thus, parking requirement for the Property should now reflect that the off-street location is only required for residential uses and that the 30 vehicle space requirement associated with CUP and Variance 94-01.1 may be filled by other methods than off-street parking.

Building Design

A summary table of LDR Compliance is provided in Table 1 on the following page.

Table 1 –Summary of LDR Compliance

Standard (Applicable Zone)	Required	Proposed	Complies?
Primary Street Building Setback (TS-2 N. Cache St.)	0'-5'(min.-max.) from back of pedestrian frontage	0'- 2' 11"	Yes.
Pedestrian Frontage (TS-2 N. Cache St.)	Covered Walkway	Covered Walkway	Yes.
Secondary Street Setback (DC-2 N. Glenwood St.)	0'-5'(min.-max.)	Screening wall does not meet setback and is within pedestrian frontage width	As Conditioned.
Pedestrian Frontage (DC-2 N. Glenwood St.)	Trees-in-grates	Detached sidewalk	As Conditioned.
Side Setback (north)	0' or 5'(min.)	> 5'	Yes.
Side Setback (south)	0' or 5'(min.)	0' or 5'(min.)	Yes.
Floor Area Ratio	1.56 (max.) for campus	0.43	Yes.
Building Stories	3 (max.)	2	Yes.
Building Height	42'	40'	Yes.

Partial Vacation of Lot Lines

The proposed structure is approximately 65' in width (including canopies) and approximately 196' in length (including canopies and the attached waste and recycling enclosure) meaning it is larger than 140'x50' (Lot 7 Plat 0100) and spans interior lot lines. The adopted building code does not permit structures to span multiple lot lines. Staff recommend a conditions of approval requiring the applicant to provide site plan with building permit submittal that shows location of proposed structure relative to interior lot lines and, prior to issuance of building permit, vacate interior lot lines that the structure spans.

Recommendation for Connecting Wall to Close Gap Between Proposed Building and Existing Hotel Jackson Building to the South

The proposed structure is setback 0' to the southern property line shared with 135 N. Cache St. (Hotel Jackson) for the eastern portion of the site. The Hotel Jackson structure, originally approved under a Planned Unit Development in 2010, has a variable setback ranging approximately 3" – 1' based on the from the shared property line for the eastern portion of the site approved building plans for 135 N. Cache Street. As a result, the Browse N Buy structure cannot directly abut the Hotel Jackson structure as intended with a zero lot line setback. If not addressed, this condition will create an irregular gap between the two structures which may collect debris and retain moisture.

The Town cannot require the property owner to physically connect the two structures, as doing so would involve development beyond their property line and require consent from the neighboring property

owner. However, staff strongly recommend incorporating some sort of connecting piece or similar design solution to eliminate the awkward gap between the buildings. Informal discussions with both property owners indicate they are open to exploring such a solution.

N. Cache Street Pedestrian Frontage and Balcony Encroachment

The proposed cantilevered 2nd story balcony and 2nd story roof canopy extend beyond the eastern property line and into the WYDOT ROW approximately 5'-3" and 2' respectively. Similar designs are frequently used in the TS-2 and neighboring zones. WYDOT and the Town of Jackson require separate agreements for those physical encroachments of this kind. Staff recommend a condition of approval that the applicant obtain approval from both parties for those encroachments prior to issuance of building permit.

Public access easements are required for any portion of required pedestrian sidewalks that are provided entirely or partially on private property and that serve the public. This ensures the public maintains access to the pedestrian infrastructure. Staff recommend a condition of approval that, prior to certificate of occupancy, the easements are provided by the Property owner to the Town and recorded with the Teton County Clerk.

Previously Approved Landscape Plan and IWUIC

Under the current LDRs, neither the DC-2 nor TS-2 zones require minimum landscape area or plant units. However, landscaping at the St. John's campus is subject to previously approved landscape plans (see "Background" section above) most recently CUP amendment P20-162. That amendment P20-162 included approval of a phased planting plan that stipulated a deadline of October 19, 2025, to plant three Ash trees directly to the north of the expanded Browse 'N Buy building (see Figure 1 on the following page). The intent of phasing was to allow planting of the Ash trees after construction of the new Browse N Buy building. The original development timeline has been delayed beyond what was expected at time of approval in 2020. However, so long as the Development Plan for the Browse N Buy structure is issued by that deadline of Oct 19, 2025, the CUP Amendment for landscape changes will not expire on that original deadline per LDR Sec. 8.4.3.D (CUP Expiration).

Effective January 1, 2025, all private land parcels in the Town of Jackson are now within the mapped Wildland Urban Interface and subject to International Wildland Urban Interface Code (IWUIC) review by the Fire Department. The IWUIC addresses elements including defensible space of structures (e.g. distance between structures and landscaping) and IWUIC reviews are now a required element of building permit submittals. The previously approved landscape plan (P20-162) was not required to accommodate this heighted level of defensible space between structures and plant units, especially important for evergreen trees such as the mature spruces found on the property.

Figure 1 – CUP Amendment P20-162 Landscape Plan
With staff notation for P25-038

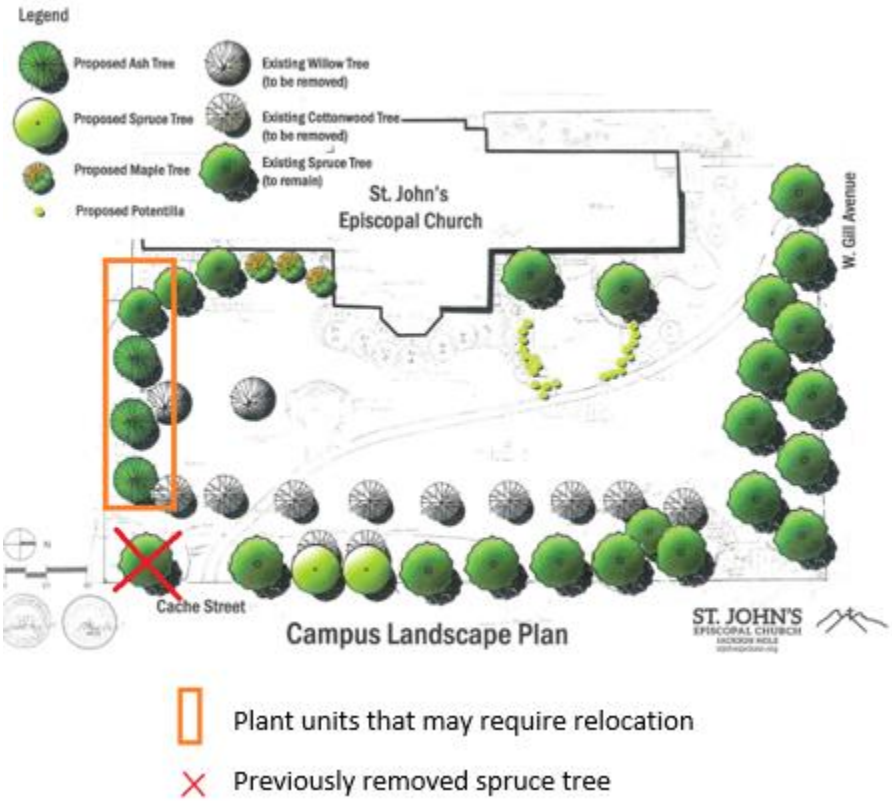

Lastly, at some point between the approval of CUP amendment P20-162 and present (staff estimates Fall 2024), one mature spruce tree was removed near the southeast corner of the property as represented in Figure 1 above. This removal was not approved as part of a landscape plan amendment nor tree removal permit. It is unclear whether that spruce tree was part of the required plant unit amount stipulated by CUPs 94-01.1 or P20-162 or if it was an additional planting over what was required. Regardless, the change in location of plant units shall be accounted for in updated landscape plan. This is accomplished by again amending the CUP for landscape modifications.

To capture all modifications to the previously approved landscape plan, staff recommend a condition of approval that, prior to issuance of building permit, the applicant shall amend the approved landscape plan for the Property to demonstrate compliance with compliance with CUP P20-162 and to document any landscape modifications that result from Development Plan P25-038.

<u>Drainage, Water, and Sanitary Sewer</u>
Based on the level of detail provided by the applicant at Development Plan review, staff find the proposed plan generally complies with LDR Division 5.7 (Grading, Erosion Control, and Stormwater Management). That said, department review comments provided by the Engineering Department to the applicant list specific construction details that shall be provided as part of final construction drawings to verify compliance with relevant standards of the DLRs and other Town Ordinances. Additionally, staff recommend a condition of approval that, with the Building Permit submittal, the applicant shall provide final water system and sanitary sewer analyses based on direction from the Town Engineer.

Affordable Workforce Housing

Based on Housing Department review, as currently proposed the development will result in an estimated affordable workforce housing requirement of 2.226 units. The applicant proposes to fulfill this requirement through the provision of two onsite affordable deed restricted ARUs and a fee-in-lieu payment for remaining fractional units. The fee-in-lieu amount is estimated at $61,388.97. Affordable workforce deed restrictions are required to be recorded with the Teton County clerk prior to certificate of occupancy of the structure. Staff included a recommended condition of approval to that end.

As the applicant has not provided floor plans of the existing structure, staff are unable to verify the estimated credit nor determine the exact location and size of the applicant's referenced Office use. Additionally, the current application includes some inconsistencies between floor area tabulations which, although relatively minor, will impact the applicant's final Housing Mitigation Plan and fee-in-lieu amount due at building permit issuance.

Staff recommend a condition of approval that, with building permit submittal, the applicant shall provide floor plan of the existing structure that identifies the location and floor area amount of all existing uses to account for the proposed 1.107-unit housing credit.

The proposed floor plan includes adjoining doors connecting the two ARUs. Residential units are only permitted one kitchen per LDR Sec. 6.1.4.2.b (Standards – Residential uses) and the units must be distinct and separate in order to full unit provision for mitigation, meaning the adjoining doors between units shall be removed. Staff recommend a condition of approval that, with building permit submittal, the applicant shall provide proposed floor plans that remove the internal connection between the two proposed accessory residential units.

Design Review Committee (DRC)

The DRC reviewed the design for conceptional review (P24-089) on June 12, 2024, and for final review (P25-055) on May 14, 2025, with the Committee's unanimous recommendation of approval to the Planning Director as presented. During discussion for final approval, the Committee gave positive feedback the pedestrian experience along N. Cache St., materiality and massing. The Committee felt the design is appropriately restrained to blend with the western character and fabric of the downtown area including consistency with the Downtown Design Overlay Area 2 (i.e., the less strict area of our western character guidelines). While the final design detail for upper story railing was still being developed at the time of DRC review, staff notes any significant design change to the railing will be submitted for DRC review.

Public Comment

At the time of publishing this staff report no public comment was received by staff.

Findings of Approval
A Development Plan shall be approved upon finding:

1. *The proposed project is consistent with the purposes and organization of the LDRs*

   Complies. Staff find the project is consistent with the purposes and organization of the LDRs. The project meets the general intent of the TS-2 and DC-2 zones by providing a vibrant mixed-use area with a variety of uses and amenities, consisting of wide sidewalks and buildings close to the sidewalk. Additionally, staff find the project meets the general configuration, density, and intensity permitted in the TS-2 and DC-2 zones.

2. *The proposed project achieves the standards and objective of the Natural Resource Overlay (NRO) and Scenic Resources Overlay (SRO), if applicable.*

   Not applicable. The property is not located within the Natural Resource Overlay (NRO) or Scenic Resources Overlay (SRO).

3. *The proposed project does not have a significant impact on public facilities and services, including transportation, potable water and wastewater facilities, parks, schools, police, fire, and EMS facilities.*

   Complies as conditioned. As conditioned, staff find that the proposed project will not have significant impacts on public facilities and services. The employee-generating development shall be mitigated through a combination of onsite, deed restricted residential units and a fee-in-lieu payment for any partial units to be determined at time of building permit. No exactions for parks or schools are required of development. Lastly, while the applicant acknowledges that the project discharges pollutants from the existing parking lot, the applicant states there is a reduction in overall runoff into the Town's stormwater system with no new pollutants being introduced. Final water system and sanitary sewer analysis shall be provided with the building permit submittal by applicant and reviewed by staff to ensure sufficient size, condition, and treatment prior to connection to Town utilities.

4. *The proposed project complies with the Town of Jackson Design Guidelines, if applicable.*

   Complies. The DRC reviewed this Development Plan for final review on May 14, 2025, and recommended approval to the Planning Director with no conditions of approval. Staff find the proposed design meets the Design Guidelines including the Downtown Design Overlay (Area 2).

5. *The proposed project complies with all relevant standards of these LDRs and other Town Ordinances.*

   Complies as conditioned. As conditioned, staff find that the application meets all standards of the LDRs and other Town Ordinances. Non-building nonconforming elements of the site – including the parking stall size, the 30' parking setback from N. Glenwood Street, and the pedestrian frontages are compliant with the applicable LDRs as proposed and conditioned. Minor adjustments to structure setbacks shall be addressed by the applicant upon building permit submittal. Necessary encroachment agreements and easements for development shall be finalized prior to issuance of building permit and certificate of

occupancy respectively. Lastly, the applicant fulfills required affordable workforce housing mitigation be provision of two on-site deed restricted residential units.

6. *The proposed project is in substantial conformance with all standards or conditions of any prior applicable permits or approvals.*

   Complies as Conditioned. Staff find that, as conditioned, the project is in substantial conformance with previous approvals, specifically the landscape requirements of CUP Amendment P20-162. A condition of approval for this development plan requires that the applicant provide a landscape plan that demonstrates compliance with CUP Amendment P20-162 and documents any landscape modifications that result from the proposed development plan such as relocation of plant units.

Fiscal Impact.
No fiscal impact is identified at this time.

Staff Impact.
The amount of staff time to review this Development Plan including revisions by project team, applicant communication, property research and site visits, and report drafting is approximately 125 hours.

Attachments or Links.
Department Reviews
Applicant Submittal
CUP Amendment P20-162 (Landscape Plan)

Suggested Motion.

I move to **recommend approval** to the Town Council of Development Plan P25-038 for an approximate 22,000sf commercial and residential mixed-use development at the properties addressed as 139 N. Cache Street and 170 N. Glenwood Street, subject to the departmental reviews attached hereto, this staff report dated July 2, 2025, with the recommended conditions of approval.

PERMIT NOTES

Report Run On: Thursday, 26 June 2025 13:26

Permit # P25-038 **Parcel # :** 22-41-16-28-4-09-005

Site Address: 139 N CACHE STREET

Project Name: 139 N Cache - Browse N Buy Development Plan

Note Type	Note Code	Text	Created By	Begin Date	End Date
GENERAL		See recommended conditions of approval in PC staff report 7.2.25 Additional Dept. Review Comments: With building permit submittal 1. With building permit submittal, provide existing floor plan and floor area tabulation of existing uses for purposes of housing mitigation review. Where housing calculator references habitable floor area see definition of habitable floor area in LDR Sec. 9.5 Defined terms) 2. Building permit plan set Please confirm floor area counts for consistency across all disciplines, narratives, tables, floor plans etc. Floor area shall be measured to the exterior face of the structural members of the wall (LDR Sec. 9.4.5 Floor area rules of measurement) 3. Screening Wall Structure setback must be 0-5 (min.-max) from the back of the 13.5 min N. Glenwood Pedestrian frontage. 4. N. Glenwood Pedestrian frontage shall be min. 13.5 with 6 clear sidewalk. Applicant may choose between lawn or pavers for furnishing area. Applicant shall Coordinate with Town Engineer details for tying into adjacent existing pedestrian frontages . 5. Parking facility shall have wheelstops installed on northern row of parking spaces in order to meet allowed 18 space length 6. Parking Calculation The expanded uses at the property require 31.26 spaces (based Structure Floor Area Calculations table on application pg 7.) The existing uses on property require a total of 79.84 spaces based on the following methodology. The properties at 170 N. Glenwood and 139 N Cache have a total of 49.84 vehicle space credit associated with the 1994 parking study which was based on 1988 uses. This includes the extent of the 1988 campus buildings including the Browse N Buy structure but does not account for the 1994 expansion to the sanctuary which required 30 vehicle spaces (see CUP and Variance 94-01.1). Existing parking credits at the property total 94.48 which include 49.48 (parking study) and 45 (on-street spaces). Applicant proposes off-street parking lot of 15 spaces. Resulting parking analysis is 111.10 requirement 109.48 provided = 1.62space deficit. However, the applicant may meet that deficit via shared parking as Affordable Workforce Housing and ARUs may share 100% with nonresidential	KPAGE@JACKSONWY.GOV	06/26/25	6/26/25

PERMIT NOTES

		spaces provided at the site (LDR Sec. 6.2.2.B). Additional Comments 1. Sign permit note- No signage has been reviewed as part of the development plan submittal. All signage shall be reviewed and permitted under a required sign permit submittal. 2. Lighting - Final lighting plan submitted with building permit shall comply with LDR Sec. 5.3.1 (Exterior Lighting Standards). 3. Snow Storage shall be shown on final building permit submittal consistent with LDR Sec. 6.2.4.C (Snow Storage Standards.)			
GENERAL	GENERAL COMMENTS	see attached letter	KMALONE@JACKSONWY.GOV	06/23/25	6/23/25
CONDITIONS		CONDITIONS OF APPROVAL A. Based on the materials submitted and level of detail provided the proposed plan complies with the relevant standards of the LDRs and other Town design development level prior to preparation of final construction drawings and does not appear to have significant impact on public facilities and services, including transportation, potable water and wastewater facilities. For future approvals, the plan materials and details must be advanced to comply with the LDRs and Town Ordinances and confirm that the development does not have significant impact on public facilities and services. The following comments are being provided to note specific areas of the plan that need to be addressed in future applications but do not relieve the applicant from compliance with relevant standards of the Land Development Regulations and other Town Ordinances. PROJECT SPECIFIC COMMENTS 1. Provide plans that are the same for common elements between all disciplines. 2. Revise the name of C2.0 and C2.1 to reflect the proper plans. 3. Coordinate with Town Engineering for the Rustic Boardwalk detail to install along Cache Street. 4. Provide curb or other barrier, other than paint, for the no parking area in the setback of the parking lot. 5. Provide fire demand calculations and verify existing 4 water line has capacity. 6. Prior to Building Permit approval, Town Encroachment Agreements and WYDOT Licenses are required for encroachments of buildings, retaining walls, foundations, canopies, balconies, roofs, shoring, etc. into the public way. a. Provide drainage plans for the encroachments that collect and direct runoff away from the public way. b. Applicant shall provide detailed and dimensioned drawings of the encroachments for the agreements and licenses. Dimensions shall show size of encroachment as well as setback and clearance compliance. For example, scaling sheet A4.1 it doesnt appear that that the balcony meets the 2 setback from back of curb.	SMOHROR@JACKSONWY.GOV	05/06/25	5/6/25

PERMIT NOTES

Report Run On: Thursday, 26 June 2025 13:26

	7. Update the construction management plan, specifically to reflect work that will impact the PROW, including pedestrian detours around the site on the west side of Cache, clarify how any access from Cache to the staging area will be accommodated, extended duration work in the public way, work that requires traffic shifts, etc. 8. A demolition permit is required for each existing structure to be removed from the site. Water and sewer services to be abandoned for the project shall be abandoned at the main during the demolition phase of the project. 9. Provide a grading plan that shows compliance with this section. Plan shall include existing and proposed site contours with elevation labels, spot elevations, high and low points, grade breaks. Provide easements for grading proposed on adjacent properties. 10. Provide a parking plan with dimensions for all parking and parking lot features that are typical and specifically identify atypical dimensions that complies with the LDRs. 11. Provide a relocation plan for the streetlight on Glenwood or show it as remaining in place. 12. For all pedestrian areas provide a plan that includes dimensions, radii, elevations, slopes (running and cross slopes, not oblique slopes), ramp slopes, grade breaks, stair dimensions, handrails, guards, etc. showing compliance with ADA, IBC, and Town standards. Remove or correct the modification to the Town sidewalk detail regarding 8% running slopes; 5% is the maximum running slope. 13. The application acknowledges that the project discharges existing pollutants from the parking lot. These pollutants will eventually flow to Flat Creek. It is recommended that while redesigning and reconstructing the parking lot, the design should consider treatment and / or retention of flows to minimize impacts from the runoff. This work now will help protect the community environment and may also better prepare the property for a stormwater utility. With the additional landscaped areas in the existing parking area it seems reasonable to route stormwater to these areas. Any overflow over the sidewalk or through a trench drain in the sidewalk would be acceptable. 14. Provide a water system analysis indicating the required domestic and fire flow demands. Identify impacts to or upgrade requirements for the existing distribution, supply, or treatment system. 15. Provide a sanitary sewer analysis. Identify downstream impacts on existing sewers, lift stations, and treatment facilities.			
CONDITIONS	See attached PDF for conditions and comments.	BTLENZ@JACKSONWY.GOV	05/06/25	5/6/25
CONDITIONS	see attached letter	KPAGE@JACKSONWY.GOV	05/02/25	5/2/25
DEFICIENCY	General Comments Verify existing total habitable floor area on the entire campus property. Applicant narrative indicates proposed expansion of greater than 20 percent of its total habitable floor area or use on a site but provides no existing floor area figures. Thus, staff is unable to verify whether or not the	KPAGE@JACKSONWY.GOV	04/25/25	4/25/25

amount of proposed floor area increase triggers compliance with LDR Sec. 1.9.2.B.5 (Required Compliance for Non-Building Nonconformities). This determination will impact below comments regarding parking facility.

Action required - Prior to Planning Commission review, revise submittal to confirm total existing habitable floor area on the campus property. This includes all habitable floor area on the property including basements and the existing Browse n Buy structure. Staff notes that floor area required to be deed restricted by LDR Sec. 6.3.3 or voluntarily done so under Sec. 7.8.3 (Deed Restricted Housing Exemption) is exempt from counting toward the 20% threshold amount of Sec. 1.9.2.B.5.

Planset inconsistencies - Revise civil and arch. site plans for consistency across disciplines. For example, A1.2 and C2.0 show different plan for elements including, but not limited to, curb location, parking facility, and transformer location. Additionally, A1.3 appears to reference a civil sheet but does not provide a page reference. Revise all planset for consistency. Additionally, DRC proposal and arch. plan A1.3 include wall and piers and pedestrian gateway along portion of the western frontage which civil plans do not reflect yet arch. plan note seem to defer to civil plans for such site design aspects.

Action required - Prior to Planning Commission review, revise submittal for consistency across disciplines/plan pages.

Clarify design intent of parking facility Narrative (pg. 9) states existing parking is nonconforming but states applicant is hopeful that the TOJ will find an avenue for approval that allows the existing (nonconforming) parking to remain unchanged. However, in discussion with applicant team, it is staffs understanding that the applicant intends to provide a compliant parking facility as part of Development Plan.

Action required - Prior to Planning Commission review, revise submittal to clarify and update application for consistency of proposal. Also please list all LDR standards that the project currently does not comply.

Sign permit note- No signage has been reviewed as part of the development plan submittal. All signage shall be reviewed and permitted under a required sign permit submittal.

Setback planes Staff notes that per Rules of Measurement 9.4.8 A setback is a measure of the shortest horizontal distance between a physical development or use and the feature from which it is being set back. A setback extends vertically above and below ground. Thus, the setback applies equally to all floors above and below the ground.

Lighting - Final lighting plan submitted with building permit shall comply with LDR Sec. 5.3.1

PERMIT NOTES

(Exterior Lighting Standards).

Lot Standards
2.2.17.B.1 Lot Standards - Building setback Primary Street (upper story front setback). While ground level meets necessary setback range of 0-5(min.-max.) the upper story building plane is shown as encroaching into the required building setback. Setback applies to the entire vertical plane. Please reference rules of measurement LDR Sec. 9.4.8.

Action required - Prior to Planning Commission review, revise submittal so that all stories meet primary building setback of 0-5(min.-max) as measured from back of pedestrian frontage.

2.2.17.B.1 Lot Standards - Building setback (side interior south) Revise plans to meet side interior building setback of 0or 5(min). Applicants LDR Compliance table states the proposed structure is 0 from side interior property line. However, plans page A1.3 shows (hatched portion of) structure at 4 property line then Foundation plan page A2.2 shows 1 dimension to property line. Based on staff measurement, it appears there is approx. 10 between above grade structure to property line. Additionally, it is unclear on plans if dimensions are to foundation or structure above ground and unclear what hatching on A1.3 represents.

Staff note (joint/fin) It appears neighboring structure at 135 N CACHE STREET was approved to be constructed at the 0 side setback and that the foundation appears to meet this 0 setback but that the building wall is setback 3 or 4 inches from the outside of the foundation wall in some areas. The intent of the 0 or 5 (min) setback is to avoid awkward or potentially hazardous narrow gaps between structures. Staff may require that a fin or joint be constructed to connect these structures and avoid such gaps.

Action required - Prior to Planning Commission review, revise for clarity and compliance by showing compliant side setback both above and below grade.

If the applicant believes that it cannot meet the 0 or 5 (Min) side setback, or that this standard is unjustified, it should submit an Administrative Adjustment (per LDR Sec. 8.8.2) which may be used to adjust structure setbacks up to 20% (in this case up to 1). This application must provide compelling reasons, supported by relevant evidence, to support a different setback. Presumably, any compelling argument for a different setback here would effectively create a new Town-wide interpretation of the 0 setback standard. Staff notes that the onus to justify the need for an Administrative Adjustment falls on the applicant.

2.2.15.B.1 Lot Standards Fencing and structure setback (follow DC-2 standards on N. Glenwood St. side). Partial Site plan A1.3

PERMIT NOTES

references wall and piers and pedestrian gateway structure along portion of the western frontage but does not provide details on dimension or height. Fencing/piers shall meet fencing height and setbacks and pedestrian gateway structure may instead comply with building setback in DC-2 zone (thus may exceed fencing height max). Current plans do not provide dimensions, setbacks, height, or other design details. Additionally, these elements are not referenced in applicants LDR Compliance table.

Action required - Prior to Planning Commission review, revise site plan to confirm these elements meet setback and height allowances in the DC-2 zone. Update across all planset disciplines for clarity and compliance. Setbacks are measured from the back of the pedestrian frontage along N. Glenwood.

Bulk Standards
Building height Provide dimension for height to stair access and clerestory. Should those elements exceed 42 just confirm compliance with allowed overruns per LDR Sec. 9.4.9.C (Building Height Exceptions).

Action required - Prior to Planning Commission review, revise for clarity and compliance. Show height dimension on plans for the tallest portion of structure, not simply the west and east facade.

Form Standards
Ground floor transparency (Town Square Building Frontage Type) It appears ground floor transparency does not meet required min 50%. Staff estimates it closer to 40%. See calculation methodology Sec. 9.4.14 (Transparency). Additionally, in conversation with applicant, the design of the eastern facade has been updated for DRC review after Development Plan submission thus does not reflect most updated facade design.

Action required Prior to Planning Commission Review, provide any updated plans (i.e. changes for DRC mentioned) and updated transparency calculation and confirm compliance with Ground floor transparency requirement in Sec. 2.2.1.D.1.

Use Standards
On-site parking required Only residential uses require on-site parking to be provided. 1/DU for ARUs (Apartment use not permitted in TS-2 zone).

Parking existing Staff confirms property includes 49.84 spaces as part of Downtown Parking study. Applicant states 44 on-street parking spaces exist. Based on the extent of parking facility and setback comments that may require project redesign, final parking calculation will be determined upon submittal of revised plans prior to Planning Commission review.

PERMIT NOTES

Housing note (allowed uses) Applicant proposes Apartment use which is not permitted in the TS-2 zone. Revise application to propose ARU (or consider short term rental use). See Dept. review comments from the Jackson Teton Co. Housing Authority.

Action Required - Prior to Planning Commission review, revise application including narrative, housing mitigation calculator and mitigation plan, to reflect allowed use of ARU.

Housing calculator Housing calculator provided does not include all floor area proposed in the new development. For example, floor area of one residential use is left blank and floor area does not sum to the proposed amount referenced on plans/narrative.

Action Required - Revise housing calculator to include all floor area including all floor area including residential floor area. Please defer to Housing Department comments of Development Plan and reach out to that dept for assistance with calculations.

Parking Facility
Parking facility conformity See floor area note above regarding verification of triggering LDR Sec. 1.9.2.B.5. Should the proposed development indeed represent an addition of greater than 20% of total existing habitable floor area, applicant shall provide a parking facility compliant with LDR Sec. 6.2.4.D (Parking Facility Dimensions). Currently proposed parking facility does not provide a compliant design.
o Drive aisle width All portions of drive aisle width must meet 24min width. Eastern portion of parking facility where spaces are across from transformer and dumpster enclosures is not dimensioned and does not appear to meet 24min width. Staff estimates it at approx. 20-21.
o Over Hang With Wheel Stop. Current plans show 18 spaces with wheel overhangs on adjacent walkway. This is only permitted provided that an overhang shall not reduce the width of an adjacent walkway to less than four feet in width for areas that pathways are required for ADA path. It appears adjacent paths are reduced to be approx. 3.5 on current plans and it is unclear if those pathways are required for ADA access to proposed or existing structures. If use of 18 spaces is proposed, plans must also show wheel stop provided.

Additionally, staff notes site plan inconsistencies between arch. and civil site plans. For example, curb location in parking setback area is inconsistent across plans.

Staff note Again, only parking spaces for residential uses are required to be provided on-site. The applicant may consider options to provide a compliant parking facility that further reduces the amount of vehicle parking.

PERMIT NOTES

Report Run On: Thursday, 26 June 2025 13:26

	Action Required - Prior to Planning Commission review, applicant shall revise parking facility design to comply with LDR Sec. 6.2.5.D (Parking Facility Dimensions) if triggered by the 20% expansion requirement in LDR Sec. 1.9.2.B.5. Parking facility shall be fully, not partially, dimensioned. Snow Storage Revise plans to show snow storage location in area other than within the existing parking facility (LDR Sec. 6.2.4.C Snow Storage Standards). Snow Storage shall accommodate snow removed from the parking, loading, and drive aisles rather than show within them.		
GENERAL	In addition to FD comments provided under P24-164, this project must meet the following. 1.) Current International Fire Code (IFC) requirements at time of permitting. 2.) Provide detail for elevators (hydraulic/traction, hoistway, car and suspension materials). Type and construction will effect automatic sprinkler and fire alarm requirements. 3.) Effective 1/1/2025, all private land parcels in the Town of Jackson and Teton County are now within the mapped Wildland Urban Interface and subject to IWUIC review by the Fire Department. A WUI application and site plan is required to be submitted through SmartGov Public Portal. The Building Department will not accept your permit submittal without having received a WUI review and permit number. 4.) Fire emergency guides shall be provided for Group R-2 occupancies and comply with the IFC, Sections 403.9.2.2.1 through 403.9.2.2.3. 5.) Premise identification per the IFC, Section 505. 6.) Key boxes per the IFC, Section 506. 7.) Project meets the construction criteria for emergency responder communications enhancement system. JH Fire recommends that raceways are provided in anticipation of system. When project is at a 70-75% build-out, JH Fire shall be scheduled for a signal survey to determine if a system will be required.	LPOTZ@JACKSONWY.GOV	04/24/25

PERMIT NOTES

Report Run On: Thursday, 26 June 2025 13:26

Note Type	Note Code	Text	Created By	Begin Date	End Date
CONDITIONS		WYDOT has no objections and offer the following comments: 1. refer to adjacent Jackson Hotel project for similarly related issues/conditions. 2. Applicant must obtain a permit from WYDOT for the shoring plan adjacent to N. Cache. 3. sidewalk closure along N. Cache allowable, ADA compliant pedestrian detours must be provided; mid-block pedestrian crossings are not allowed. 4. N. Cache two-way traffic must be maintained at all times 5. N. Cache traffic control must obtain a temporary use permit (M-76) from WYDOT. lane shifts may be allowable with temporary on-street parking restrictions. 6. where will construction access and staging areas be? 7. For any new utility construction within WYDOT right-of-way, the utility companies/owner shall obtain the necessary M-54 utility license via the new on-line permitting process, MainStar, located at https://usa.maintstar.co/Wyoming/Logon.aspx. Currently WYDOT requires any utility company needing access to the MainStar system to contact the local District Office for the license or permit, or to email dot.utilities@wyo.gov to set up your login credentials. 8. An M-21 permit is necessary for new utility connections to existing permitted utilities within WYDOT R/W. WYDOT Utilities Section can be found at the following link: http://www.dot.state.wy.us/home/engineering_technical_programs/utilities_section.html 9. For canopy along N. Cache, obtain the necessary (M-29) encroachment permit from WYDOT. minimum of 10' vertical clearance above sidewalk, supported structurally outside the highway R/W, located horizontally 2' from back of curb, do not reduce sight distance to official traffic control devices.	MTIPPETTS@JACKSONWY.GOV	04/11/25	4/11/25
CONDITIONS		The structure must meet the most current adopted building codes of the Town of Jackson at the time of permitting.	KSLUDER@JACKSONWY.GOV	04/07/25	4/7/25
DEFICIENCY		Application lacks LDR compliance table summary	KPAGE@JACKSONWY.GOV	03/25/25	3/25/25
CONDITIONS		The Engineering Division has reviewed your application for a DEVELOPMENT PLAN submitted on and with application materials as dated above.	MTIPPETTS@JACKSONWY.GOV	03/20/25	4/10/25

DEVELOPMENT PLAN – Approved with Conditions

P25-038 Sufficient Review
ADDRESS: 139 N Cache Street
OWNER: Episcopal Church in Jackson Hole, WY
APPLICANT: Jorgensen Associates, Inc.

5/6/2025
Scott Mohror and Brian Lenz, (307) 733-3079

DATE OF SUBMITTAL: 4/4/2025
DATE OF MATERIALS: 3/7/2025
REVISION NO.: 01

The Engineering Division has reviewed your application for a **DEVELOPMENT PLAN** submitted on and with application materials as dated above.

The following comments are being provided for use in preparation of future applications.

CONDITIONS OF APPROVAL

A. Based on the materials submitted and level of detail provided the proposed plan complies with the relevant standards of the LDRs and other Town design development level prior to preparation of final construction drawings and does not appear to have significant impact on public facilities and services, including transportation, potable water and wastewater facilities. For future approvals, the plan materials and details must be advanced to comply with the LDRs and Town Ordinances and confirm that the development does not have significant impact on public facilities and services. The following comments are being provided to note specific areas of the plan that need to be addressed in future applications but do not relieve the applicant from compliance with relevant standards of the Land Development Regulations and other Town Ordinances.

PROJECT SPECIFIC COMMENTS

1. Provide plans that are the same for common elements between all disciplines.
2. Revise the name of C2.0 and C2.1 to reflect the proper plans.
3. Coordinate with Town Engineering for the Rustic Boardwalk detail to install along Cache Street.
4. Provide curb or other barrier, other than paint, for the no parking area in the setback of the parking lot.
5. Provide fire demand calculations and verify existing 4” water line has capacity.
6. Prior to Building Permit approval, Town Encroachment Agreements and WYDOT Licenses are required for encroachments of buildings, retaining walls, foundations, canopies, balconies, roofs, shoring, etc. into the public way.

SUBMITTED

a. Provide drainage plans for the encroachments that collect and direct runoff away from the public way.
b. Applicant shall provide detailed and dimensioned drawings of the encroachments for the agreements and licenses. Dimensions shall show size of encroachment as well as setback and clearance compliance. For example, scaling sheet A4.1 it doesn't appear that that the balcony meets the 2' setback from back of curb.

7. Update the construction management plan, specifically to reflect work that will impact the PROW, including pedestrian detours around the site on the west side of Cache, clarify how any access from Cache to the staging area will be accommodated, extended duration work in the public way, work that requires traffic shifts, etc.
8. A demolition permit is required for each existing structure to be removed from the site. Water and sewer services to be abandoned for the project shall be abandoned at the main during the demolition phase of the project.
9. Provide a grading plan that shows compliance with this section. Plan shall include existing and proposed site contours with elevation labels, spot elevations, high and low points, grade breaks. Provide easements for grading proposed on adjacent properties.
10. Provide a parking plan with dimensions for all parking and parking lot features that are typical and specifically identify atypical dimensions that complies with the LDRs.
11. Provide a relocation plan for the streetlight on Glenwood or show it as remaining in place.
12. For all pedestrian areas provide a plan that includes dimensions, radii, elevations, slopes (running and cross slopes, not oblique slopes), ramp slopes, grade breaks, stair dimensions, handrails, guards, etc. showing compliance with ADA, IBC, and Town standards. Remove or correct the modification to the Town sidewalk detail regarding 8% running slopes; 5% is the maximum running slope.
13. The application acknowledges that the project discharges existing pollutants from the parking lot. These pollutants will eventually flow to Flat Creek. It is recommended that while redesigning and reconstructing the parking lot, the design should consider treatment and / or retention of flows to minimize impacts from the runoff. This work now will help protect the community environment and may also better prepare the property for a stormwater utility. With the additional landscaped areas in the existing parking area it seems reasonable to route stormwater to these areas. Any overflow over the sidewalk or through a trench drain in the sidewalk would be acceptable.
14. Provide a water system analysis indicating the required domestic and fire flow demands. Identify impacts to or upgrade requirements for the existing distribution, supply, or treatment system.
15. Provide a sanitary sewer analysis. Identify downstream impacts on existing sewers, lift stations, and treatment facilities.

SUBMITTED

JACKSON/TETON COUNTY AFFORDABLE HOUSING

MEMORANDUM

To: Katelyn Page
Town of Jackson Planning and Building

From: Kristi Malone
Jackson/Teton County Housing Department

Re: Housing Department Review of Development Plan Application (P25-038) for Proposed Mixed-Use Retail/Residential/Office at St. John's Episcopal Church (139 N Cache)

Date: Updated June 20 ~~April 30~~, 2025

The applicant is proposing redevelopment of the existing Browse & Buy store with construction of approximately 22,000sf of mixed-use space including two residential units to be restricted to meet housing mitigation requirements. This review is updated to reflect the applicant's resubmittal dated May 27, 2025.

Affordable Workforce Housing Standards:
Applicability. The Development Plan application asserts that the existing 4,070 square feet of retail and 930sf of office space carry a 1.107-unit housing mitigation credit for the site. This is consistent with the building footprint represented in the existing conditions survey on sheet Site-2 for the existing Browse-n-Buy retail store. Due to the age of the existing building, it is not clear whether historic building or use permits exist documenting the dimensions of the interior space and uses. If existing floor plans are available, they should be included in the Building Permit application to better document both retail and office existing uses.

Amount Required. For proposed development, the Development Plan lacks consistency between the square footage presented in the narrative, Housing Calculator excerpts, and plan sheets. This makes it difficult to establish an exact housing mitigation requirement, but we can expect the requirement to exceed two required mitigation units based on this schematic design. The Building Permit application must include a Housing Calculator that accounts for all proposed square footage and that value must match with proposed construction drawings. Remember that shared circulation space and non-habitable floor area should also be accounted for in the Housing Calculator.

- Circulation = common hallways, entryways, stairways, and other circulation areas in buildings with multiple residential or nonresidential units, that are not within any individual unit.

- Habitable floor area = can be used for living purposes, usually having access to heat, plumbing, and electricity. A space that is fully enclosed, conditioned, and can be used for more than six months in a year is habitable. Habitable floor area includes studios, exercise rooms, offices, and similar spaces. It also includes foyers, hallways, restrooms, storage, and other common areas within a building. Habitable floor area does not include barns, garages, or unfinished attic space. Some of the "mechanical and common" space identified in brown on the proposed plan set should actually be counted as habitable space because they are restrooms or storage.

Proposed method of provision. The application proposes restricting both on-site residential units and paying a fee-in-lieu to meet the housing mitigation requirement. If the housing mitigation requirement exceeds 2 units, the LDRs tell us that the priority method is deed restriction of both on-site ARUs as Affordable housing and the remaining partial unit above 2 may be paid by a fee-in-lieu. As a preliminary analysis using the conceptual proposed floor area presented in the application, the on-site 2-bedroom unit will be restricted to household earning up to 50% Median Family Income and the 1-bedroom unit will be restricted to households earning up to 120% Median Family Income.

Unit Type	Units	Method	Instructions
2 bed, < 50% Median Income	1.000	On-Site Construction	please document compliance with Sec. 6.3.5.D.1
1 bed, < 120% Median Income	1.000	On-Site Construction	please document compliance with Sec. 6.3.5.D.1
2 bed, < 120% Median Income	0.226	Fee In-Lieu	please document compliance with Sec. 6.3.5.C
Total Units:	**2.226**	**Fee In-Lieu:**	**$61,388.97**

Median Family Income (MFI) is updated annually so these numbers will change, but currently:

- 2-bed 0-50% MFI may be rented at a maximum of $849/month
- 1-bed 80-120% MFI may be rented at a maximum of $1,981/month

Livability Standards & Restrictions: All mitigation units must be designed to meet the Livability Standards of the Housing Department Rules & Regulations and be permanently deed restricted with the applicable template deed restriction approved by the Town Council at the time of recordation. The conceptual floor plans presented in this application for the two mitigation units meet all required Livability Standards.

The following reminders are provided to the landowner when ordering appliances, finishes, and refining long-term site management:

Materials and finishes:

- Countertops must be new, durable and cleanable material.
- Flooring must be new carpet, wood, tile, vinyl, linoleum or concrete with 10-year warranty. Water resistant (no carpet) flooring required in kitchen and bathrooms.
- Bathroom vanity/cabinetry must include storage space.
- Bedroom closets must include installed shelf over rod. All other closets must include any necessary shelving and/or fixtures to be useful.

- Appropriate noise mitigation material must be installed in all shared walls, ceilings and floors.
- Confirm that at least one window in each bedroom can open for ventilation and access to outside air.
- Where ped/vehicle access is adjacent to windows, top-down window coverings are required to be installed.

Appliances:

- Refrigerator must be a minimum of 20 cubic feet for the one-bedroom and 25 cubic feet for the two-bedroom.
- New, Energy Star, UL-listed with 1-year warranty.
- Include ventilation fan over range.
- Furnace/ boiler/water heater must be appropriately sized for number of residents and have minimum 5-year warranty.

Shared Parking:

- At least one parking space must be allocated for use by each residential unit and must be numbered/designated with signage.
- Assignment/use must also be codified in writing for residents (resident lease, etc.)

Process & Conditions of Approval:

Please include the following recommended conditions upon approval for this Development Plan.

1. Due to the age of the existing building, it is not clear whether historic building or use permits exist documenting the dimensions of the interior space and uses. If existing floor plans are available, they should be included in the Building Permit application to better document both retail and office existing uses.

2. Adjust the Housing Mitigation Calculator to include all proposed floor area and ensure consistency with floor area values presented elsewhere in the application.

3. Eliminate the shared door between the two residential units.

4. **Required components of livability.** Restricted housing units shall include, at a minimum, the components of Livability Standards required by Sec. 3-3 of the Housing Department Rules and Regulations.

   Prior to issuance of Building Permit,

   - ☐ a Livability Standards review that confirms compliance of proposed plans must be issued by the Housing Department.

   Prior to issuance of Certificate of Occupancy,

   - ☐ the Housing Department shall inspect the site to ensure restricted units were built to approved Livability Standards.

5. **Deed Restriction.** To ensure continued compliance with the standards of the Town of Jackson Land Development Regulations and the Housing Department Rules & Regulations, required dwelling units shall be subject to a deed restriction for

Affordable housing, in perpetuity, in a form established and approved by the Housing Department.

Prior to issuance of Certificate of Occupancy,

- ☐ a deed restriction drafted by the Housing Department using the applicable approved Restriction Template will be recorded on the units/property. The applicant will be responsible for payment of recording fees**.**
- ☐ the leasing agent/realtor/property manager or person managing residents shall attend a Compliance Conference with the Housing Department to learn how Workforce and Affordable households are qualified for residency in restricted units.

Thank you for the opportunity to review. Please contact me with any questions.

JACKSON/TETON COUNTY AFFORDABLE HOUSING

MEMORANDUM

To: Katelyn Page
Town of Jackson Planning and Building

From: Kristi Malone
Jackson/Teton County Housing Department

Re: Housing Department Review of Development Plan Application (P25-038) for Proposed Mixed-Use Retail/Residential/Office at St. John's Episcopal Church (139 N Cache)

Date: April 30, 2025

The applicant is proposing redevelopment of the existing Browse & Buy store with construction of approximately 22,000sf of mixed-use space including two residential units.

Affordable Workforce Housing Standards:
Applicability. The Development Plan application asserts that the existing 4,070 square feet of retail and 930sf of office space carry a 1.107-unit housing mitigation credit for the site. This is consistent with the building footprint represented in the existing conditions survey on sheet Site-2 for the existing Browse-n-Buy retail store, but it is not clear where the existing 930sf office space is located.

Amount Required. For proposed development, the Housing Mitigation Calculator shown on pages 8 and 13 of the application only accounts for 16,247sf where plan sheet A2.2 shows a total gross building area of 21,944sf. The calculator should be adjusted to show all proposed floor area. "Circulation or Nonhabitable Space" can be selected in the calculator for applicable square footage exempt from housing mitigation.

- Circulation = common hallways, entryways, stairways, and other circulation areas in buildings with multiple residential or nonresidential units, that are not within any individual unit.
- Habitable floor area = can be used for living purposes, usually having access to heat, plumbing, and electricity. A space that is fully enclosed, conditioned, and can be used for more than six months in a year is habitable. Habitable floor area includes studios, exercise rooms, offices, and similar spaces. It also includes foyers, hallways, restrooms, storage, and other common areas within a building. Habitable floor area does not include barns, garages, or unfinished attic space. Some of the "mechanical and common"

space identified in brown on the proposed plan set should actually be counted as habitable space because they are restrooms or storage.

The calculator also lists a 1,070sf apartment, which is not an allowed use. As noted in the Housing Department's pre-app meeting comments, in the Town Square-2 zone, no primary residential uses are allowed, so the two residential units proposed are categorized as Accessory Residential Units (ARUs). ARUs have particular use standards which are discussed below.

Proposed method of provision. The application proposes restricting one of the on-site ARUs and paying a fee-in-lieu to meet the housing mitigation requirement. If the housing mitigation requirement exceeds 2 units, the LDRs priority list tell us that both on-site ARUs should be deed restricted as Affordable housing and the remaining partial unit above 2 may be paid by a fee-in-lieu. Considering the use standards for ARUs, the applicant may find deed restriction of both on-site units as housing mitigation a preferred option. The primary difference between an ARU restricted as Workforce versus Affordable is that Affordable units have maximum rental rates and must be occupied by households within a designated income category, while Workforce units only require full-time local business employment.

Livability Standards & Restrictions: All mitigation units must be designed to meet the Livability Standards of the Housing Department Rules & Regulations and be permanently deed restricted with the applicable template deed restriction approved by the Town Council at the time of recordation.

Accessory Residential Unit Use Standards:
ARUs accessory to a non-residential use must be deed restricted, at a minimum, as Workforce Rental units according to the LDRs and the Housing Department Rules & Regulations. The applicant may choose to further deed restrict the two on-site ARUs as Affordable to meet housing mitigation standards, as discussed above. Deed-restricted Affordable or Workforce Housing units have a minimum rental period of 6 months, which is in conflict with the applicant's proposal to retain the 1-bedroom unit unrestricted for temporary housing needs like emergency shelter, space for visiting speakers, etc. Unfortunately, a use category for transitional housing or emergency shelter does not exist in the LDRs today, so any proposed temporary housing would need to be categorized as an allowed use in the TS-2 zone, like short-term rental or lodging. The advantage of the short-term rental use is that occupancy is permitted for fewer than 30 consecutive days, which is accomodating for visiting speakers, households in transition between leases, and others. The disadvantage is that short-term rental use and conventional lodging are typically associated with a high number of employees needed to serve that use (think hotels and vacation rentals). The housing mitigation requirement would add a 0.102-unit to the 2+ housing mitigation units already required by the retail, service, and office uses on site.

Process & Conditions of Approval:
The following conditions of approval are typically included in review of development applications that require housing mitigation and/or use a housing incentive tool. They are included here for reference.

1. Identify the location of the 930sf existing Office space to account for the proposed 0.229-unit housing credit.

2. Adjust the Housing Mitigation Calculator to include all proposed floor area and only allowed uses in the TS-2 zone.

3. Confirm proposed methodology for meeting housing mitigation requirement. Construction of required affordable housing on the site of the employee generating development is the prioritized method according to the LDRs. Any lower priority method, including payment of a fee-in-lieu, may be used upon making the findings presented in LDR 6.3.5.C.

4. **Required components of livability.** Restricted housing units shall include, at a minimum, the components of Livability Standards required by Sec. 3-3 of the Housing Department Rules and Regulations.

   Prior to applicant's submittal of Building Permit,

   - ☐ the Livability Standards Questionnaire (https://www.tetoncountywy.gov/DocumentCenter/View/15860/Livability-Standards-Questionnaire-Interactive) shall be completed for each unit and submitted to the Housing Department for review along with floor plans that include dimensions and a functional furniture placement diagram.
   - ☐ a letter from the Housing Department will be issued to the applicant stating whether the unit(s) are compliant with Livability Standards or whether there are required changes.
   - ☐ a Livability Standards Letter from the Housing Department that confirms approval is required to be included in any Building Permit application.

   Prior to issuance of Certificate of Occupancy,

   - ☐ the Housing Department shall inspect the site to ensure restricted units were built to approved Livability Standards.

5. **Deed Restriction.** To ensure continued compliance with the standards of the Town of Jackson Land Development Regulations and the Housing Department Rules & Regulations, required dwelling units shall be subject to a deed restriction for housing, in perpetuity, in a form established and approved by the Housing Department.

   Prior to issuance of Certificate of Occupancy,

   - ☐ a special restriction drafted by the Housing Department using the applicable approved Restriction Template will be recorded on the unit/property. The applicant will be responsible for payment of recording fees**.**
   - ☐ the leasing agent/realtor/property manager or person managing residents shall attend a Compliance Conference with the Housing Department to learn how Workforce and Affordable households are qualified for residency in restricted units.

Thank you for the opportunity to review. Please contact me with any questions.

Enclosed: Housing Dept. comments on pre-application meeting, 12/30/2024

JACKSON/TETON COUNTY AFFORDABLE HOUSING

MEMORANDUM

To: Katelyn Page
Town of Jackson Planning and Building

From: Kristi Malone
Jackson/Teton County Housing Department

Re: Housing Department Review of Pre-Application Request (P24-164) for Proposed Mixed-Use Retail/Residential/Office at St. John's Episcopal Church (139 N Cache)

Date: December 30, 2024

The applicant is proposing redevelopment of the existing Browse & Buy store with construction of approximately 21,895sf of mixed-use space including two residential units. This Pre-Application conference is in preparation for submittal of a Development Plan application.

Affordable Workforce Housing Standards:
The Town of Jackson Land Development Regulations (LDRs) include Affordable Workforce Housing Standards in Division 6.3. The purpose of these standards is to ensure that affordable workforce housing is provided to the local workforce by employee-generating development proportionate to the need for affordable workforce housing that development creates. To confirm compliance with the standards of this Division, a sufficient application for any employee-generating development must include a Housing Mitigation Plan. The contents of a Housing Mitigation Plan, described below, are listed in Section 6.3.6 of the LDRs or you may use the checklist here.

Applicability. Identify any "credits" the property may carry from past or present uses in existence on the site. On-site uses and square footage meeting the "Existence" definition should be entered into the Town's Housing Calculator under "Step 2: Existing Development." Next, account for proposed floor area and uses that are exempt from housing mitigation, like residential units that are part of the 2:1 Bonus, non-habitable or shared circulation space, and units to be restricted for required mitigation. These should be entered into the Town's Housing Calculator under "Step 3: Proposed Development."

Amount Required. Once **all** existing and proposed square footage is entered into the Town's Housing Calculator, an Affordable Workforce Housing requirement will be generated as either number of housing units (> or = 1 unit) or a fee-in-lieu (<1 unit). Include a copy of your completed calculator in the application.

Tabulation of unit types. The LDRs establish an allocation schedule for affordability and size (number of bedrooms) for each housing mitigation unit required. The first required mitigation unit is always a 2-bedroom 80-120% Median Family Income (MFI) unit and the second is always a studio or 1-bedroom <50% MFI unit. Information on income ranges and maximum rental rates is available at the Housing Department's website. Any variation proposed by the applicant must be approved by the Housing Director per the standards of an Administrative Adjustment and LDR Sec. 6.3.4.B.2.a and 6.3.4.C.1.

Proposed method of provision. The priority method for meeting Affordable Workforce Housing requirements is construction of mitigation units on or off-site. Use of lower priority methods (conveyance of land, using a banked unit, restriction of an existing unit, or payment of an in-lieu fee) must be justified by demonstrating impracticality of higher priority methods. The mitigation requirement must be met before the employee-generating development can be used (before C/O is issued), unless an alternative timeline is approved for a phased construction plan.

Livability Standards & Restrictions: All mitigation units must be designed to meet the Livability Standards of the Housing Department Rules & Regulations and be permanently deed restricted with the applicable template deed restriction approved by the Town Council at the time of recordation.

Accessory Residential Unit Use Standards:
In the Town Square-2 zone, no primary residential uses are allowed, so these two residential units will be categorized as Accessory Residential Units (ARUs). At a minimum, ARUs accessory to a non-residential use must be deed restricted as Workforce Rental units. However, the applicant may choose to further deed restrict the two on-site ARUs as Affordable to meet housing mitigation standards, as discussed above. In the pre-app, we learned that the applicant is exploring the possibility of permitting a unit as short-term rental/lodging since temporary housing needs are part of the organization's programming. Deed-restricted Affordable or Workforce Housing units have a minimum rental period of 6 months.

Process & Conditions of Approval:
The following conditions of approval are typically included in review of development applications that require housing mitigation and/or use a housing incentive tool. They are included here for reference.

1. **Required components of livability.** Restricted housing units shall include, at a minimum, the components of Livability Standards required by Sec. 3-3 of the Housing Department Rules and Regulations.
   Prior to applicant's submittal of Building Permit,
   - ☐ the Livability Standards Questionnaire (https://www.tetoncountywy.gov/DocumentCenter/View/15860/Livability-Standards-Questionnaire-Interactive) shall be completed for each unit and submitted to the Housing Department for review along with floor plans that include dimensions and a functional furniture placement diagram.

- ☐ a letter from the Housing Department will be issued to the applicant stating whether the unit(s) are compliant with Livability Standards or whether there are required changes.
- ☐ a Livability Standards Letter from the Housing Department that confirms approval is required to be included in any Building Permit application.

Prior to issuance of Certificate of Occupancy,

- ☐ the Housing Department shall inspect the site to ensure restricted units were built to approved Livability Standards.

2. **Deed Restriction.** To ensure continued compliance with the standards of the Town of Jackson Land Development Regulations and the Housing Department Rules & Regulations, required dwelling units shall be subject to a deed restriction for housing, in perpetuity, in a form established and approved by the Housing Department.

Prior to issuance of Certificate of Occupancy,

- ☐ a special restriction drafted by the Housing Department using the applicable approved Restriction Template will be recorded on the unit/property. The applicant will be responsible for payment of recording fees**.**
- ☐ the leasing agent/realtor/property manager or person managing residents shall attend a Compliance Conference with the Housing Department to learn how Workforce and Affordable households are qualified for residency in restricted units.

Thank you for the opportunity to join the pre-application meeting. Please contact me with any questions.

For Office Use Only

Fees Paid_____ Date & Time Received _____

Application #s _____ _____ _____

Please note: *Applications received after 3 PM will be processed the next business day.*

PROJECT.

Name/Description: St. John's Browse 'N Buy

Physical Address: 170 N Glenwood St

Lot, Subdivision: Lots 1-7, 14-20 Block 7 Original Townsite PIDN: 22-41-16-28-4-09-005

PROPERTY OWNER.

Name: Episcopal Church in Jackson Hole, WY c/o Jimmy Bartz Phone: (307)733-2603

Mailing Address: P.O. Box 1690, Jackson, WY ZIP: 83001

E-mail: jimmy@stjohnsjackson.org

APPLICANT/AGENT.

Name: Jorgensen Associates, Inc. c/o Mila Dunbar-Irwin Phone: (307)733-5150

Mailing Address: P.O. Box 9550, Jackson, WY ZIP: 83002

E-mail: mdi@jorgeng.com

DESIGNATED PRIMARY CONTACT.

_____Property Owner X_____Applicant/Agent

TYPE OF APPLICATION. *Please check all that apply; review the type of application at www.townofjackson/200/Planning*

Use Permit

_____Basic Use

_____Conditional Use

_____Special Use

Relief from the LDRs

_____Administrative Adjustment

_____Variance

_____Beneficial Use Determination

_____Appeal of an Admin. Decision

Physical Development

_____Sketch Plan

X_____Development Plan

_____Design Review

Subdivision/Development Option

_____ Subdivision Plat

_____Boundary Adjustment (replat)

_____Boundary Adjustment (no plat)

_____Development Option Plan

Interpretations

_____Formal Interpretation

_____Zoning Compliance Verification

Amendments to the LDRs

_____LDR Text Amendment

_____Map Amendment

Miscellaneous

_____**Other:**_____

_____ Environmental Analysis

PRE-SUBMITTAL STEPS. *To see if pre-submittal steps apply to you, go to www.townofjackson.com/200/Planning and select the relevant application type for requirements. Please submit all required pre-submittal steps with application.*

Pre-application Conference #: P24-164 Environmental Analysis #: _____

Original Permit #: _____ Date of Neighborhood Meeting: 1/16/25

SUBMITTAL REQUIREMENTS. *Please ensure all submittal requirements are included. The Planning Department will not hold or process incomplete applications. Partial or incomplete applications will be returned to the applicant. Go to www.townofjackson.com/200/Planning and select the relevant application type for submittal requirements.*

Have you attached the following?

X **Application Fee.** Fees are cumulative. Go to www.townofjackson.com/200/Planning and select the relevant application type for the fees.

X **Notarized Letter of Authorization.** A notarized letter of consent from the landowner is required if the applicant is not the owner, or if an agent is applying on behalf of the landowner. Please see the Letter of Authorization template at http://www.townofjackson.com/DocumentCenter/View/845/LetterOfAuthorization-PDF.

X **Response to Submittal Requirements**. The submittal requirements can be found on the TOJ website for the specific application. If a pre-application conference is required, the submittal requirements will be provided to applicant at the conference. The submittal requirements are at www.townofjackson.com/200/Planning under the relevant application type.

Note: Information provided by the applicant or other review agencies during the planning process may identify other requirements that were not evident at the time of application submittal or a Pre-Application Conference, if held. Staff may request additional materials during review as needed to determine compliance with the LDRs.

Under penalty of perjury, I hereby certify that I have read this application and associated checklists and state that, to the best of my knowledge, all information submitted in this request is true and correct. I agree to comply with all county and state laws relating to the subject matter of this application, and hereby authorize representatives of Teton County to enter upon the above-mentioned property during normal business hours, after making a reasonable effort to contact the owner/applicant prior to entering.

Mila Dunbar-Irwin Digitally signed by Mila Dunbar-Irwin DN: C=US, E=mdi@jorgeng.com, OU=Jorgensen Associates, CN=Mila Dunbar-Irwin Date: 2025.02.26 16:31:19-07'00' 02/25/2025

Signature of Property Owner or Authorized Applicant/Agent Date

Jorgensen Associates, Inc. c/o Mila Dunbar-Irwin Deputy Planning Manager

Name Printed Title

Town of Jackson
150 E Pearl Avenue
PO Box 1687, Jackson, WY 83001
P: (307)733-3932 F: (307)739-0919
www.jacksonwy.gov

Date:

LETTER OF AUTHORIZATION

NAMING APPLICANT AS OWNER'S AGENT

PRINT full name of property owner as listed on the deed when it is an individual OR print full name and title of President or Principal Officer when the owner listed on the deed is a corporation or an entity other than an individual: The Reverend James P. Bartz Title: Rector / President

Being duly sworn, deposes and says that The Episcopal Church in Jackson Hole is the owner in fee of the premises located at:
Name of legal property owner as listed on deed

Address of Premises: 170 Glenwood Jackson WY 83001

Legal Description:
Please attach additional sheet for additional addresses and legal descriptions

And, that the person named as follows: Name of Applicant/agent: Jorgensen c/o Mila Dunbar-Irwin

Mailing address of Applicant/agent: PO Box 9550 Jackson, WY 83002

Email address of Applicant/agent: mdi@jorgeng.com

Phone Number of Applicant/agent: 307-733-5150

Is authorized to act as property owner's agent and be the applicant for the application(s) checked below for a permit to perform the work specified is this(these) application(s) at the premises listed above:

☒ Development/Subdivision Plat Permit Application ☐ Building Permit Application

☐ Public Right of Way Permit ☐ Grading and Erosion Control Permit ☐ Business License Application

☐ Demolition Permit ☐ Home Occupation ☐ Other (describe)

Under penalty of perjury, the undersigned swears that the foregoing is true and, if signing on behalf of a corporation, partnership, limited liability company or other entity, the undersigned swears that this authorization is given with the appropriate approval of such entity, if required.

Property Owner Signature

Rector / President

Title if signed by officer, partner or member of corporation, LLC (secretary or corporate owner) partnership or other non-individual Owner

STATE OF Wyoming)
) SS.
COUNTY OF Lincoln)

ROBYN WELLS REED
Notary Public - State of Wyoming
Commission ID # 154127
My Commission Expires
January 05, 2028

The foregoing instrument was acknowledged before me by James Bartz this 21 day of October. WITNESS my hand and official seal.

Notary Public

My commission expires: January 05, 2028

St. John's Episcopal Church of Jackson Hole
Browse 'N Buy Building
Development Plan
Application

Owner:
St. John's Episcopal Church of Jackson Hole
PO Box 1690
Jackson WY 83001
307-733-2603

Prepared by:

JORGENSEN
It's About People, Trust and Know How

Jorgensen Associates, Inc.
Engineers, Land Surveyors, & Planners
1315 Highway 89 South, Suite 201
P.O. Box 9550
Jackson, WY 83002
307.733.5150

Town of Jackson
Re-submittal Date: May 27, 2025
Jorgensen Associates, Inc.
Project No. 23092

CONTENTS

CONTENTS 2

SECTION 1 - PROJECT BACKGROUND, OVERVIEW, FINDINGS AND RESPONSE TO SUBMITTAL CHECKLIST 4

I. PROJECT BACKGROUND & HISTORY 4

II. LOCATION & ZONING 5

III. OWNER & PROJECT TEAM INFORMATION 6

IV. CURRENT PROGRAMMING & DEVELOPMENT PROPOSAL 6

V. FINDINGS FOR APPROVAL 10

VI. PROPOSED DEVELOPMENT PROGRAM 12

A. FENCING 12

B. EXTERIOR LIGHTING 12

C. LANDSCAPING 12

D. SIGNS 12

E. GRADING, EROSION CONTROL, STORMWATER MANAGEMENT 13

F. ALLOWED USES 13

G. PARKING AND LOADING 13

H. SUBDIVISION 13

I. EMPLOYEE HOUSING 13

J. TRANSPORTATION FACILITY 14

K. REQUIRED UTILITIES 14

L. MAXIMUM SCALE OF USE 14

M. OPERATIONAL STANDARDS 14

N. OTHER 14

SECTION 2 – ENGINEER'S REPORT 16

O. Introduction 16

P. Site and Soils Conditions 16

Q. Groundwater 16

R. Transportation Parking and Access 16

S. Grading, Drainage, and Stormwater Management 17

T. Water Supply and Distribution System 17

U. Wastewater Collection and Treatment Systems 18

V. Cable Utilities and Gas 18

W. Refuse, Trash, and Recycling 19

X. Snow Storage 19
SECTION 3 – DEVELOPMENT PLAN DESIGN 20
SECTION 4 – SUPPORTING MATERIALS 53
SECTION 5 – APPLICATION DESIGN 74

SECTION 1 - PROJECT BACKGROUND, OVERVIEW, FINDINGS AND RESPONSE TO SUBMITTAL CHECKLIST

I.PROJECT BACKGROUND & HISTORY

St. John's Episcopal Church (St. John's Church) of Jackson Hole is an episcopalian church founded in Jackson, WY in 1911. Throughout its history, its mission has been to utilize community and faith to impact the greater Jackson community in both spiritual and practical ways. Its original rectory has filled the needs of a growing Teton County by acting as a meeting place, social hall, hostel, library, school, and hospital over the years. Its main campus is northwest of the Town Square and consists of five buildings: the St. John's Church, the St. John's Chapel, the St. John's Church office building, a children's building, and the Browse 'N Buy thrift store. Pedestrian walkways, a large lawn, a labyrinth, and parking area also exist on the site.

Browse 'N Buy began as a biannual rummage sale in the 1970s, eventually growing into a thrift retail store intended to serve the Jackson community by providing used goods at an affordable price. It is run by a mix of employees and volunteers committed to supporting the community and planet through reusing, repurposing, and recycling items. The store operates by accepting donations of clothing and household items in good condition, selling them at reasonable prices, and then using the profits to support community outreach programs, such as One22 and Habitat for Humanity. Some items are donated to local community resource organizations, and donations that are deemed ineligible for sale are taken to the Recycling Center when possible.

Just in the past few months, the income from Browse 'N Buy has helped to support two disabled members of the community catch up on rent and keep their housing secure. In the past, it's gone to things such as providing a single mother with a dependable, used automobile to travel from home to work to school, supporting artistic endeavors like the provision of scholarship to local children in the Art Association's Spring Break Art Camp and giving a gift to the Jackson Hole Writer's Conference. The resource generated from Browse 'N Buy has helped support an annual Jackson Hole Indigenous Art Market featuring native artists from the Wind River Indian Reservation and across the country. At St. John's they say, "we use the income from Browse to make a love-spreading difference in Jackson and sometimes beyond." Browse 'N Buy helps add nearly a half million dollars annually to the mission, care, and service the Church provides to the Jackson Hole community. This redesign is anticipated to double that resource, enabling not only support for the community and her members in crisis, but also to develop new proactive programs and opportunities for service in our community.

Browse 'N Buy is currently located on the St. John's campus at 139 North Cache Street and is open Monday through Saturday from 10:00 AM to 5:00 PM. The store receives a significant volume of donations during limited drop-off hours, which staff sort into categories for sale, recycling, donation, or disposal when necessary. The sorting process takes place in the back room of the

building and is frequently overloaded due to the vast number of donations received. The store is crowded as well, both with shoppers and items for sale, because it has evolved past its current space of 5,000 SF and is now insufficient and fails to meet the needs of the community as best as it could.

Browse 'N Buy celebrated its 50th birthday in November of 2022, and the church has been actively planning and designing a re-build of this building for over a decade. Recognizing the growing needs of the community and the limitations of the existing facilities, St. John's Church launched the "A Legacy of Love" campaign to fund a redevelopment and expansion of the Browse 'N Buy store. Since the earliest charette in 2012, the scope and design is aimed at providing pleasing and functional design echoing the church's past and present along with Jackson's western heritage.

An expanded Browse 'N Buy building in its current design concept will provide the mission three floors (basement, first and second) of expanded retail space, substantial additional storage space keeping seasonal donations out of the landfill, and space offering ease for receiving and sorting through the backdoor. The building will also house the Jackson Cupboard with ground floor retail-like space for Cupboard clients and substantial storage for food resources for the valley. A retail-like space allows the clients of One22's Jackson Cupboard the dignity of selecting their own groceries. The basement of the building will host both expanded and accessible dedicated space for use by the recovery community in Jackson Hole. This will enable the recovery community to continue to offer the transformation of life and subsequent nurture and care that comes from sobriety and a community committed to that cause. The second floor will offer much-needed office space and two units of housing for church and partner staff.

The building has been designed to blend into the character of the St. John's Church campus and the neighboring town square area, with consideration for the needs of the community and the St. John's Church, specifics of the site, and the Town of Jackson Land Development Regulations (LDRs).

II. LOCATION & ZONING

The site is located just northwest of the Town Square and is split-zoned between Town Square 2 (TS-2) and Downtown Core 2 (DC-2). It is specifically described as Lots 1-7 & 14 – 20 Block 7, Jackson Original Townsite. Plat 100 filed on July 18th, 1901 depicts these lots.

The site is integral to the character of downtown Jackson and has housed St. John's Church and the Browse 'N Buy thrift store for decades, as well as the Food Pantry. The character of the surrounding neighborhood is comprised of a mix of uses including short term lodging, restaurant, service, retail, commercial, office, housing, and government, as well as the open space of Town Square. The immediately adjacent properties include Hotel Jackson, Cowboy Coffee, and town square retail shops, and across the street are more restaurants and retail. The site is surrounded by N Cache St, Gill Ave, and N Glenwood St.

This property is not with the Scenic Resource Overlay (SRO) or the Natural Resource Overlay (NRO). It is in the Town Square and Town Commercial Core Comp Plan Districts. As of January 1, 2025 it will be within the Teton County CWPP Wildland Urban Interface.

III. OWNER & PROJECT TEAM INFORMATION

PROPERTY OWNER & APPLICANT:
The Episcopal Church in Jackson Hole
170 N Glenwood St
PO Box 1690
Jackson WY 83001

PLANNING, SURVEY, GEOTECH, & ENGINEERING
Jorgensen Associates, Inc.
P.O. Box 9550
Jackson, Wyoming 83002
307-733-5150
mdi@jorgeng.com

ARCHITECTURE
Hawtin Jorgensen
265 E Simpson Ave
Jackson WY 83001
307-733-4364

IV. CURRENT PROGRAMMING & DEVELOPMENT PROPOSAL

Current programming includes the Browse 'N Buy retail store, which is open from 9:00am to 5:00pm, Monday – Saturday, and closed on Sundays. Drop-off hours are currently 8:30am to 11:30am at the back door, on the same days the store is open.

The development proposal consists of a multi-use two-story building with a basement that encompasses approximately 21,944 SF (14,785 square feet above grade with a 7,311 square foot basement). It will have space for an expanded Browse 'N Buy, the Jackson Cupboard / One22, Recovery Community meeting rooms, office space for the church, and two apartments for church and partner staff, both~~one~~ of which will be deed restricted for affordable housing mitigation. See below for a table containing the development quantities for this project.

Structure Floor Area Calculations			
Basement	Use		Square Feet
Browse N Buy	Retail		4,764
Recovery Meeting Space	Office		2,547
Jackson Cupboard	Service		-
Residential Apartments	Housing		-
		Total Floor Area	**7,311**
First Floor			
Browse N Buy	Retail		5,164
Recovery Meeting Space	Office		-
Jackson Cupboard	Service		1,924
Residential Apartments	Housing		-
		Total Floor Area	**7,088**
Second Floor			
Browse N Buy	Retail		4,679
Recovery Meeting Space	Office		-
Jackson Cupboard	Service		-
Residential Apartments	Housing		2,622
		Total Floor Area	**7,301**
		Total Floor Area	**21,700**

Total Floor Area on Site (sf)				
Building	**Basement**	**First Floor**	**Second Floor**	**Total**
St. John's Chapel	0	1,440	0	1,440
St. John's House	2,139	2,139	2,139	6,417
Church	0	11,570	0	11,570
Children's Building	3,329	3,329	0	6,658
Existing Browse N Buy	0	4,181	0	4,181
Proposed Browse N Buy	7,311	7,088	7,301	21,700
ARU (Exempt)	0	0	2,622	2,622*
Existing Total	5,468	22,659	2,139	30,266
Proposed Total	12,779	25,566	9,440	47,785
Proposed Total (not including ARU)	12,779	25,566	6,818	45,163
Percent Increase				**49%**

*includes percentage of mechanical / circulation space

Browse 'N Buy will keep its current hours of operation. 9:00am – 5:00pm, Monday through

Saturday and closed on Sundays. Drop off hours at the backdoor may change from 8:30am to 11:30am to 8:30am to 12:30pm with the expanded receiving capacity allowed by the new building. The recovery community meets seven (7) days per week between 7:00-8:00am, 12:00pm-1:00pm, and 7:00-8:00pm, and generally see between 1 and 30 people at meetings. The new space will be dedicated solely to this purpose and not shared with other uses. The Jackson Cupboard will define hours based on staff and volunteer schedules and client needs, but usually operates about 12 hours per week over three (3) sessions and sees a total of approximately 40 people. There will be two residential units, a two bedroom unit and a one bedroom unit. Both units will be deed restricted ARUs at <50% median income to meet affordable housing requirements. Housing mitigation is required as calculated below using the Housing Mitigation Calculator.

Step 2: Existing Development

Housing is only required for new development. Please describe the existing use of the site so that it can be credited from the housing requirement. The definition of existing use is Section 6.3.2.A.1 of the LDRs. Generally, the existing use to enter is the use with the highest housing requirement that either existed in 1995, or has been permitted since 1995. Please attach proof of existence.

Existing Use (Sec. 6.3.2.A)	Housing Requirement (Sec. 6.3.3.A)	Use Size: bedrooms	Use Size: habitable sf	Use Quantity	Housing Required
Retail	0.000216*sf		4070	1	0.878
Service	0.000216*sf		0	1	0.000
Office	0.000247*sf		930	1	0.229
				Existing Workforce Housing Credit	1.107

Step 3: Proposed Development

Please describe the proposed use of the site to determine if affordable workforce housing is required as part of the development. Describe the end result of the proposed development. (For example: in the case of an addition do not enter the square footage of the addition, enter the size of the unit upon completion of the addition.)

Proposed Use	Housing Requirement (Sec. 6.3.3.A)	Use Size: bedrooms	Use Size: habitable sf	Use Quantity	**Housing Required**
Retail	0.000216*sf		11502	1	**2.481**
Service	0.000216*sf		1540	1	**0.332**
Office	0.000247*sf		1911	1	**0.471**
Affordable Housing Unit	exempt		2139	2	**0.000**
Circulation or Nonhabitable Space	exempt		4628	1	**0.000**

Affordable Workforce Housing Required: 2.177 units Fee-in-Lieu Amount: n/a

The project proposes to deed both units. The applicant will work with the housing department to determine appropriate income-levels if the proposed is not preferred. The distribution is proposed as follows with the fee-in-lieu for the additional 0.177 unit calculated.

Unit Type	Units	Method	Instructions
2 bed, < 50% Median Income	1.000	On-Site Construction	please document compliance with Sec. 6.3.5.D.1
1 bed, < 120% Median Income	1.000	On-Site Construction	please document compliance with Sec. 6.3.5.D.1
2 bed, < 120% Median Income	0.177	Fee In-Lieu	please document compliance with Sec. 6.3.5.C
Total Units:	**2.177**	**Fee In-Lieu:**	**$36,871.95**

Overall, the uses proposed in the new building will not be intensified, simply more efficiently accommodated with space designed for their purposes. There are no new operating hours proposed and no increase in traffic other than that which may naturally come from an expanded downtown shopping opportunity. Any increase in retail shoppers is anticipated to be foot traffic from the downtown core.

Parking for the St John's Campus is currently shared between all campus uses. There are a total of 114 spaces available via off-street, on-street, and historical parking credits as per the Town Parking Credit Table. The off-street spaces are in the existing parking lot at the southwest corner of the campus (the "Browse 'N Buy parking lot") which has (21) spaces, including (2) accessible and has unstriped areas dedicated to loading and unloading. This lot does not comply with Glenwood Street parking setbacks or the Off-Street Parking and Loading Design Standards.

The existing church use requires 55 spaces and the proposed Browse 'N Buy expansion will require 36 spaces (see calculations below), for a total of 91 spaces required for the campus.

Due to the floor area expansion rule in LDR Sec. 1.9.2.B.5, the current parking lot is required to be brought into dimensional compliance. In order to do this, and to make space for a dumpster enclosure and electrical transformers, the number of spaces proposed in the parking lot is (15). These include four dedicated Browse 'N Buy spaces for drop offs and two dedicated residential spaces for the proposed apartments.

The (91) required parking spaces for the campus will be provided by the 44 on-street spaces and 49.84 historical parking credits and by the (15) spaces in the Browse 'N Buy parking lot, providing a total of (108.84) spaces, representing a (17.84) space surplus compared to the

minimum requirement of 91. Town of Jackson staff has determined that there is no minimum required in the off-street lot specifically, and the parking requirement can be met through a combination of available spaces.

Use	Name	SF – Difference	Parking Calc	Total
Retail	Browse 'N Buy	14852sf	2.25/1000sf	24.26 → 25
Service	Food Cupboard	1924sf (all new)	1.5/1000sf	4.33 → 5
Office	Recovery	2547sf	1.65/1000sf	3.64 → 4
Residential	Apartments	2622sf (all new)	1/DU	2
			TOTAL	**36**

The project does not trigger the bicycle parking requirements, as it does not generate new parking requirements over what is allocated already. However, the applicant is proposing to provide a total of eight covered bicycle parking spots, (4) on the west end of the trash enclosure in the parking lot and four on the north side of the new building. Rack style and placement will comply with Town of Jackson Standards.

V. FINDINGS FOR APPROVAL

I. 8.3.3.C. Development Plan - Findings for Approval

A development plan shall be approved upon finding the application:

1. ***Is consistent with the desired future character described for the site in the Jackson/Teton County Comprehensive Plan (Comp Plan).***

   Complies. The site is currently located within Jackson/Teton County Comprehensive Plan (Comp Plan) District 1 – Sub-area 1.2 – Town Square, Outer Square as well as District 2 – Sub-area 2.3 – Town Commercial Core, Downtown**.** These two subareas govern this site's relationship with the Comprehensive Plan.

   Subarea 1.2, Outer Square, is a Stable Subarea intended to "focus on maintaining western character consistent with the character of the district." This project has been designed with this at the forefront and will blend seamlessly with the surrounding buildings in keeping with the traditions of Town Square architecture. The walkway will be covered, boardwalk, and inviting, and the design reflects the western heritage of the area.

   Subarea 2.3, Downtown, is a Transitional Subarea that is intended to "create a vibrant mixed use area by accommodating a variety of uses and amenities." It is acknowledged that there will be lodging, long-term residential housing, commercial and office uses. Browse 'N Buy has been a much-loved staple of the downtown shopping experience,

and this proposal will allow it to continue to provide this amenity for visitors and locals alike. Incorporating housing and civic space in the development program meet the mixed-use intention of the Downtown Subarea.

St John's Episcopal Church and Rectory has been a mainstay of the Jackson community since it was built in 1911. The Rectory was used as a meeting place and social hall as well as a hostel for local ranchers and lodgers staying at dude ranches. It has been used as a community library and primary classroom at various times. The Chapel was built in 1916 using local logs, and was designed in the rustic style that has come to define downtown Jackson.

Browse 'N Buy was established as a mission of St John's whose purpose is to assist the Jackson community by stocking affordable necessities, clothing, and household goods, and to use the funds raised to support community outreach programs. The space also houses the Jackson Cupboard/One22, and 12-Step Programs.

This proposal complies with the intentions of both Subareas 1.2 and 2.3 in that it maintains a mixed-use development including retail, civic space, and residential uses in a western character building. This project is simply a remodel and upgrade for existing functions that will provide better services and amenities for the community.

2. ***Achieves the standards and objective of the Natural Resource Overlay (NRO) and Scenic Resources Overlay (SRO), if applicable.***

   Not Applicable.

3. ***Does not have significant impact on public facilities and services, including transportation, potable water and wastewater facilities, parks, schools, police, fire, and EMS facilities.***

   Complies. There will be no increase in impact to transportation, parks, schools, police, fire, and EMS, and no undue impact on potable water and wastewater facilities. The calculations for the latter can be found in the Engineer's Report in Section 2.

4. ***Complies with the Town of Jackson Design Guidelines, if applicable;***

   Complies. The project has gone before the Design Review Committee via informal review on June 12, 2024 with a conceptual plan. This plan was determined to comply with the Town Design Guidelines and the DDO-2 Western Character Design Guidelines with minimal feedback. This project has been designed to the standards set out in these guidelines.

5. ***Complies with all relevant standards of these LDRs and other Town Ordinances***

   Complies. This project has been designed to comply with all relevant standards of the LDRs.

6. ***Is in substantial conformance with all standards or conditions of any prior applicable permits or approvals.***

   Complies. This project complies with the conditions of the 1994 Conditional Use Permit and 1999 Development Plan which apply to the property.

VI. PROPOSED DEVELOPMENT PROGRAM

I. Structure, Location, and Mass – See SD set (**Section 3**) for details. The proposed building is a rectangular two-story design with a basement and is currently designed as 21,944 SF in total, with a 1,430 SF exterior covered walkway, a 1,097 SF exterior covered dumpster/unloading area, and a 1,356 SF exterior second floor deck. There will be areas devoted to retail space for Browse 'N Buy, storage and sorting space for Browse 'N Buy, the recovery community, the Jackson Cupboard, residential apartments, mechanical and common space, and circulation and egress. It is located within the setbacks prescribed by the TS-2 zone with its main entrance facing to the east and its parking and drop off area facing to the west off Glenwood Street.

II. Maximum Scale of Development – the building is currently designed at 21,994 SF

III. Lot Coverage – not applicable in TS-2 zone

IV. Minimum LSR – not applicable in TS-2 zone

A. FENCING

No new fencing is proposed for the project.

B. EXTERIOR LIGHTING

Will comply with the LDRs, be Dark Sky Compliant, and be detailed at Building Permit.

C. LANDSCAPING

See **Section 3** for Landscaping Plan.

D. SIGNS

Browse 'N Buy will have a sign on the building on N Cache St and a small sign on Glenwood. Both of which will comply with the sign standards.

E. GRADING, EROSION CONTROL, STORMWATER MANAGEMENT

See Engineers Report **Section 2,** Site Plan **Section 3**, and Stormwater Calculations **Section 3**.

F. ALLOWED USES

The project will consist of four uses: retail, service, office, and residential. There is an assembly use (church) on the property as well which has been previously permitted. The uses are all allowed as per the LDRs and a Basic Use Permit application has been submitted separately.

G. PARKING AND LOADING

See Engineer's Report **Section 2.**

H. SUBDIVISION

No subdivision is contemplated in this application.

I. EMPLOYEE HOUSING

The project proposes to build ~~one~~ two units of affordable housing for mitigation ~~and pay a fee-in-lieu for the other~~. The applicant will work with the Housing Department to determine the unit size and income level for the on-site units and fee-in-lieu. See below for the housing calculations.

Step 2: Existing Development

Housing is only required for new development. Please describe the existing use of the site so that it can be credited from the housing requirement. The definition of existing use is Section 6.3.2.A.1 of the LDRs. Generally, the existing use to enter is the use with the highest housing requirement that either existed in 1995, or has been permitted since 1995. Please attach proof of existence.

Existing Use (Sec. 6.3.2.A)	Housing Requirement (Sec. 6.3.3.A)	Use Size: bedrooms	Use Size: habitable sf	Use Quantity	Housing Required
Retail	0.000188*sf		4070	1	0.766
Service	0.000188*sf		0	1	0.000
Office	0.000215*sf		930	1	0.200
				Existing Workforce Housing Credit	0.966

Step 3: Proposed Development

Please describe the proposed use of the site to determine if affordable workforce housing is required as part of the development. Describe the end result of the proposed development. (For example: in the case of an addition do not enter the square footage of the addition, enter the size of the unit upon completion of the addition.)

Proposed Use	Housing Requirement (Sec. 6.3.3.A)	Use Size: bedrooms	Use Size: habitable sf	Use Quantity	**Housing Required**
Retail	0.000188*sf		11726	1	**2.208**
Service	0.000188*sf		1540	1	**0.290**
Office	0.000215*sf		1911	1	**0.411**
Affordable Housing Unit	exempt			1	**0.000**
Apartment (Unrestricted)	0.000017*sf+(Exp(-14.17+1.59*Ln(sf)))/2.176		1070	1	**0.039**

Affordable Workforce Housing Required: 1.982 units Fee-in-Lieu Amount: n/a

Step 2: Existing Development

Housing is only required for new development. Please describe the existing use of the site so that it can be credited from the housing requirement. The definition of existing use is Section 6.3.2.A.1 of the LDRs. Generally, the existing use to enter is the use with the highest housing requirement that either existed in 1995, or has been permitted since 1995. Please attach proof of

Existing Use (Sec. 6.3.2.A)	Housing Requirement (Sec. 6.3.3.A)	Use Size: bedrooms	Use Size: habitable sf	Use Quantity	Housing Required
Retail	0.000216*sf		4070	1	0.878
Service	0.000216*sf		0	1	0.000
Office	0.000247*sf		930	1	0.229
				Existing Workforce Housing Credit	1.107

Step 3: Proposed Development

Please describe the proposed use of the site to determine if affordable workforce housing is required as part of the development. Describe the end result of the proposed development. (For example: in the case of an addition do not enter the square footage of the addition, enter the size of the unit upon completion of the addition.)

Proposed Use	Housing Requirement (Sec. 6.3.3.A)	Use Size: bedrooms	Use Size: habitable sf	Use Quantity	**Housing Required**
Retail	0.000216*sf		11726	1	**2.529**
Service	0.000216*sf		1540	1	**0.332**
Office	0.000247*sf		1911	1	**0.471**
Affordable Housing Unit	exempt		2139	2	**0.000**
Circulation or Nonhabitable Spa	exempt		4628	1	**0.000**

Affordable Workforce Housing Required: 2.226 units Fee-in-Lieu Amount: n/a

J. TRANSPORTATION FACILITY

No changes are proposed to access for this project. The existing parking lot can be accessed off of Glenwood and there is pedestrian access via N Cache, Gill, and Glenwood with connecting sidewalks to all entrances.

K. REQUIRED UTILITIES

See Engineer's Report **Section 2.**

L. MAXIMUM SCALE OF USE

The property has a maximum floor area ratio of 1.83, allowing a maximum floor area of 192,113-sf excluding basements. The existing floor area of the property is 24,798 SF, a floor area ratio of 0.236, and the proposed floor area of the property is 35,250 SF, a floor area ratio of 0.336. This project would increase the total floor area of the property by 10,452 SF.

M. OPERATIONAL STANDARDS

Refuse and recycling will be collected in an enclosure which will be placed in the existing parking lot.

N. OTHER

A neighborhood meeting was held on Thursday, January 16th at Hansen Hall of St. John's Church with approximately 15 attendees. A full summary can be found in **Section 4.**

SECTION 2 – ENGINEER'S REPORT

O. Introduction

This Engineer's Report is intended to provide the engineering basis for design and to discuss engineering related topics for the re-development of the existing Browse 'N Buy building site located primarily on Lot 7, Block 7, Original Town Site, Jackson, Wyoming, currently known as 170 Glenwood Street. The proposed re-development includes the demolition and reconstruction of a larger, more efficient building to meet current and future Church outreach mission needs on the Southeastern corner of the St John's Church campus. Design details will advance as the plan moves into construction permitting and construction phases of the project. The programming and scale of the proposed building is further discussed in **Section 1. Subsection I. –** *Project Background & History* of the Development Plan Application narrative.

The existing Town of Jackson road, water, sanitary sewer and storm drain infrastructure will be used to service the development. The Town infrastructure and electrical, gas, and communication utilities are in place at or near the proposed development. The existing conditions and proposed site plans are depicted in **Section 3** – *Development Plan Design***.** The general engineering items are discussed here.

Vehicular access to the proposed building will remain unchanged, with off-street parking provided in the existing parking lot accessed from Glenwood Street. Pedestrian access is provided to the site from both Cache Street and Glenwood Street.

P. Site and Soils Conditions

The project site is located in downtown Jackson and is generally flat, with a very gradual slope toward the north-west (approximately 2%). No steep slopes exist in the project area. The underlying geology is the Cache Creek alluvial fan deposits which consist of water-laid gravel, sand, silt, and clay. The project location is within the distal end of the fan (far from the mouth of the canyon) where finer grained deposits are more abundant. Based on this geology and Jorgensen's experience with soils in the immediate vicinity, conditions are expected to be suitable for construction, however a site-specific geotechnical investigation is ongoing with results that will be used in the preparation of the final design and building permit documents.

Q. Groundwater

Based on previous Jorgensen groundwater monitoring on adjacent properties, groundwater depths in this area range between 25' and 50' deep. This depth is suitable for the proposed construction. The adjacent buildings (both the Hotel to the south and the Church to the north) have basements as deep or deeper than the proposed basement elevation. The geotechnical investigation is expected to include the installation of a groundwater monitoring well to confirm site specific groundwater depths which will be incorporated into the design.

R. Transportation Parking and Access

Analysis and calculation of parking required is provided in **Section 1., Subsection IV.** – *Current*

Programming & Development Proposal. The Glenwood Street parking lot will provide (15) off-street parking stalls, including (2) Accessible stalls. Since there is no minimum number of stalls required in this parking lot, this is more than sufficient. Plan views of lot detailing key dimensions, layouts and drainage patterns are provided in the plan set. A total of eight covered bicycle parking spaces are provided, four on the west end of the dumpster enclosure and four spaces adjacent to the north side of the proposed building.

Vehicular and pedestrian access to the site will remain unchanged and is provided by the existing Town of Jackson gridded street network, which is expected to be sufficient to service the proposed re-development.

S. Grading, Drainage, and Stormwater Management

The existing building has a roof that drains north and south to landscaped areas where runoff infiltrates. The existing parking lot slopes west to the Glenwood Street gutter.

Drainage patterns in the parking lot drainage basin (Basin A) will remain unchanged, with runoff flowing west to the Glenwood Street gutter, however the basin size will be reduced slightly (with less landscaped and less hardscaped/roof area in the basin). Pre-development runoff for the 100-year storm from Basin A is calculated to be 0.81cfs compared to a post-development runoff of 0.77cfs. The effect of the reduction in area will result in smaller overall runoff to the Town stormwater system in Glenwood with no new pollutants being introduced. With no new pollutants (either type or quantity) being introduced, no pollution abatement is required by the Land Development Regulations (5.7.4.B.2.h).

The building drainage basin will consist entirely of roof, with runoff free-draining off the roof to the north (drip-edge) and internally collected and routed to drains. All runoff from the main building will be collected and routed to a surface infiltration basin in the existing landscaped area north of the proposed building and east of the St. John's Church Sanctuary. A basin sufficient to detain the 5244 gallons from the 100-year storm will be provided.

If it is decided during subsequent design to collect storm runoff in an underground collection and conveyance system that is discharged into the Town of Jackson Stormwater system, it will be treated, at minimum, with a down-turned 90 bend on the outlet from the last structure.

Table 1 – Stormwater Calculations

Stormwater Rational Method Runoff Design Storm Frequency = 100			
Basin	Pre-Development Peak (cfs)	Post-Development Peak (cfs)	Required Water Storage (gal)
Basin A - Parking Lot	0.81	0.77	0
Basin B - Building & Landscaped Area	0.44	0.63	5244
Total	**1.25**	**1.39**	**5244**

T. Water Supply and Distribution System

Water (domestic and fire) will be supplied to this development by the Town of Jackson Public Water

System using the existing Cache Street service connection (contingent on sufficient size and good condition), or a new service tap will be made from the same water main in Cache.

Water demand for domestic use was calculated using the AWWA M22 method and estimated at 58 gpm based on fixture counts for the proposed building. No additional irrigation demand is expected as part of this development with the reduction in landscaped areas and the irrigation system already in place and supplied from the other building on the property.
The fire suppression system demand of 1,500gpm was calculated utilizing Appendix B, Table B105.2 and Table 105.1(2) of the 2021 International Fire Code based on building area and Type IV construction. All buildings will provide a full sprinkler system designed per NFPA 13.

U. Wastewater Collection and Treatment Systems

Sanitary sewer will be connected to the existing Town of Jackson sewage collection lines via the existing service in the Browse 'N Buy parking lot. This service will be inspected to ensure sufficient size and good condition prior to connection.

Wastewater generation values were developed using 2018 Wyoming DEQ Chap. 25, Table 2 for the proposed building program. Those values are summarized in Table 2 below.

Table 2 – Wastewater Generation

Sanitary Sewer Generation					
				Average Daily Flow; percent of maximum	60%
				Peak Hour Factor	2
Unit Type	Number of Units	Max Flow per Unit, (gpd)[1]	Average TOTAL, (gpd)	Maximum TOTAL, (gpd)	PEAK HOUR, (gpm)
Mercantile (person)	106	15	954	1590	2.2
Storage & Sorting (person)	18	15	162	270	0.4
Recovery Community (person)	114	15	1026	1710	2.4
Jackson Food Cupboard (person)	25	15	225	375	0.5
Residential Apartments (bedroom)	2	120	144	240	0.3
Total			**2511**	**4185**	**5.8**

V. Cable Utilities and Gas

Electrical power and natural gas connections have been coordinated with Lower Valley Energy, and connections of both will be provided in the southwest corner of the building. Relocated transformers and an electrical vault serving the proposed building, the rest of the St, John's Campus and the property to the south will be located west of the dumpster enclosure. All relocated Primary lines, vaults and transformers are proposed in an existing Lower Valley Energy easement. Gas to the proposed building will be taken from the existing St. John's Church Sanctuary service, which runs just to the west of the proposed building and will require minor relocation near the proposed building. Communication utility vaults can be located in the same transformer area and will be coordinated with Century Link Communications, Charter Communications and

SilverStar Communications.

W. Refuse, Trash, and Recycling

Refuse, garbage, and multiple types of recycling are proposed in a dedicated, covered area west of the main Browse 'N Buy building. The enclosure, when the doors are closed, will hide the dumpsters and be inaccessible to wildlife.

X. Snow Storage

A snow storage area sized to be a minimum of 10% of the area of the plowed off-street parking will be provided in the western end of the parking lot. This area is not required to meet the minimum required parking.

SECTION 3 – DEVELOPMENT Plan Design

- **Browse 'N Buy Schematic Design (SD) Set - Elevations, Floor plans, & Character sketches by Hawtin Jorgensen Architects**

- **Browse 'N Buy Civil Set by Jorgensen Associates, P.C.**

- **Stormwater, Water, & Sewer Calculations by Jorgensen Associates, P.C.**

- **Construction Management Plan**

BROWSE 'N BUY BUILDING

ST. JOHN'S EPISCOPAL CHURCH

EXTERIOR RENDERING

PROJECT INFORMATION and STANDARDS

PHYSICAL ADDRESS: 139 N. Cache Street
LOT, SUBDIVISION: Lots 1-7 & 14-20, Block 7, Jackson Original Townsite
ZONING: Town Square-2 (TS-2)
ZONING OVERLAYS: Lodging Overlay, Downtown Design Overlay-2 (Western Character)

STREET FRONTAGE TYPE: Covered Walkway
BUILDING FRONTAGE TYPE: Town Square

ZONE: TS-2 AND DC-2

REGULATION	REQUIREMENT	PROVIDED
BUILDING SETBACKS		
-PRIMARY STREET SETBACK RANGE	0-5'	
-SECONDARY STREET SETBACK RANGE	0-5'	
-SIDE INTERIOR	0' or 5'	
-REAR		
-ABUTTING PROTECTED ZONE (MIN)	10'	

ALL PROPOSED NEW CONSTRUCTION SHALL BE FULLY ADA COMPLIANT.

DEMONSTRATION OF COMPLIANCE WITH THE LATEST VERSION OF THE AMERICANS WITH DISABILITIES ACT SHALL BE IN THE FORM OF DRAWING DETAILS AND SPECIFICATIONS SUBMITTED AT TIME OF BUILDING PERMIT SUBMITTAL.

ACCESSIBILITY VIA COMPLIANT ENTRANCES, ELEVATORS, RAMP, ACCESSIBLE ROUTES TO ALL AREAS OF BUILDING, AND ACCESSIBLE ROUTES TO ALL ENTRANCES ON THE SITE ARE DESIGNED FOR.

LDR COMPLIANCE SUMMARY

	REQUIREMENT	PROPOSED	COMPLIANCE
PRIMARY STREET SETBACK RANGE (MIN/MAX)	0' to 5'	4'-6" at first fl 6" at second fl	complies
SECONDARY STREET SETBACK RANGE (MIN/MAX)	0' to 5' (N/A)	283'-4"	complies
LANDSCAPE SURFACE RATIO (MIN)	TO BE DETERMINED	TO BE DETERMINED	complies
PLANT UNITS (MIN)	TO BE DETERMINED	TO BE DETERMINED	complies
PARKING REQUIREMENTS	TO BE DETERMINED	TO BE DETERMINED	
BUILDING HEIGHT (MAX.)	42'	37'-1"	complies
STORIES (MAX.)	3	2	complies
FLOOR AREA RATIO (FAR MAX.)	1.83	0.331	complies
PEDESTRIAN FRONTAGE	COVERED WALKWAY	COVERED WALKWAY	complies
BUILDING FRONTAGE TYPE	TOWN SQUARE	TOWN SQUARE	complies
AFFORDABLE HOUSING	1.784	2	complies

PROJECT DIRECTORY

OWNER: St. John's Episcopal Church
Cache Street Campus

Jackson, WY 83001
(307) xxx-xxxx

ARCHITECT: Hawtin Jorgensen Architects
P.O. Box 1249
265 E. Simpson Avenue
Jackson, WY 83001
(307) 733-4364

STRUCTURAL ENGINEER: G&S Structural Engineers
Lindsay Blvd.
Idaho Falls, ID 83401
Dean Tracy
(208) 523-6918

MECHANICAL ENGINEER: Musgrove Engineering, P.A.
645 W. 25th St. Idaho Falls, ID
83402
Phone: 208.523.2862

CIVIL ENG'R: Jorgensen Engineering
1315 HWY 89 S., Ste 201 Box 9550
Jackson, WY 83002
(307) 733-5150

ELEC ENG'R: Musgrove Engineering, P.A.
645 W. 25th St. Idaho Falls, ID 83402
Jeremy Bradley, EE
Phone: 208.523.2862
Cell phone: 208.589.0049

LANDSCAPE ARCHITECT:

CODE CONSULTANT: TERP Consulting

GENERAL CONTRACTOR: Shaw Construction

NORTH

VICINITY MAP

NTS

DRAWING INDEX

= DEV SUBMITTAL DRAWINGS

ARCHITECTURAL
A0.1 - COVER SHEET / PROJECT INFO
A0.2 - CODE ANALYSIS
A0.3 - CODE ANALYSIS AREA PLANS
A1.1 - SURVEY/EXISTING CONDITIONS SITE PLAN
A1.2 - DEMOLITION SITE PLAN
A1.3 - PROPOSED SITE PLAN
A1.4 - SITE DETAILS
A2.1 - FOUNDATION PLAN
A2.2 - BASEMENT FLOOR PLAN
A2.3 - FIRST FLOOR PLAN
A2.4 - SECOND FLOOR PLAN
A2.5 - ROOF PLAN
A2.6 - ENLARGED PLANS, PLAN DETAILS
A2.7 - ENLARGED PLANS
A3.1 - EXTERIOR ELEVATIONS
A3.2 - EXTERIOR ELEVATIONS
A3.3 - EXTERIOR ELEVATIONS
A4.1 - BUILDING SECTIONS
A4.2 - BUILDING SECTIONS
A4.3 - BUILDING SECTIONS
A4.4 - BUILDING SECTIONS
A4.5 - WALL SECTIONS
A4.6 - WALL SECTIONS
A4.7 - WALL SECTIONS
A5.1 - WINDOW SCHEDULE
A5.2 - DOOR SCHEDULE
A5.3 - WINDOW & DOOR DETAILS
A5.4 - PARTITION SCHEDULE
A5.5 - FINISH SCHEDULE, HARDWARE SCHEDULE
S5.6 - APPLIANCE, PLUMBING FIXTURE SCHEDULES
A6.1 - INTERIOR ELEVATIONS
A6.2 - INTERIOR ELEVATIONS
A6.3 - INTERIOR ELEVATIONS
A7.1 - BASEMENT REFLECTED CEILING PLAN
A7.2 - FIRST FLOOR REFLECTED CEILING PLAN
A7.3 - SECOND FLOOR REFLECTED CEILING PLAN
A8.1 - STAIR & ELEVATOR DETAILS
A8.2 - SCHEMATIC FIRST FLOOR FRAMING PLAN
A8.3 - SCHEMATIC SECOND FLOOR FRAMING PLAN
A8.4 - SCHEMATIC BALCONY & SHED ROOF FRAMING PLAN
A8.5 - SCHEMATIC ROOF FRAMING PLAN
A8.6 - MISC. DETAILS
A8.7 - MISC. DETAILS

LANDSCAPE

CIVIL
C1.0 - GRADING AND EROSION CONTROL (GEC) COVER SHEET
C1.1 - PROJECT NOTES AND LEGEND
C2.0 - EXISTING SITE CONDITIONS
C3.0 - CIVIL SITE OVERVIEW
C3.1 - CIVIL SITE IMPROVEMENTS
C4.0 - CIVIL DETAILS
C4.1 - CIVIL DETAILS
C1.0 - SMALL WASTEWATER FACILITY (SWF) COVER SHEET
C1.1 - LEGEND AND PROJECT NOTES
C2.0 - WASTEWATER FACILITY OVERVIEW
C2.1 - PROPOSED WASTEWATER FACILITY
C3.0 - WASTEWATER FACILITY DETAILS

STRUCTURAL
S1.0 - GENERAL NOTES
S1.1 - GENERAL NOTES
S1.2 - GENERAL NOTES
S2.1 - FOUNDATION PLAN
S2.2 - FIRST FLOOR FRAMING PLAN
S2.3 - SECOND FLOOR FRAMING PLAN
S2.4 - ROOF FRAMING PLAN
S4.1 - FOUNDATION DETAILS
S4.2 - FOUNDATION DETAILS
S5.1 - FRAMING DETAILS
S5.2 - FRAMING DETAILS

MECHANICAL / PLUMBING
M1.0 - MECHANICAL LEGEND & SPECIFICATONS
M1.1 - MECHANICAL SCHEDULES
M1.2 - MECHANICAL SCHEDULES & DETAILS
M2.0 - BASEMENT HVAC PLAN
M2.1 - FIRST FLOOR HVAC PLAN
M2.2 - SECOND FLOOR HVAC PLAN
M3.0 - BASEMENT MECHANICAL PIPING PLAN
M3.1 - FIRST FLOOR MECHANICAL PIPING PLAN
P1.0 - PLUMBING LEGEND, SPECIFICATIONS & SEQUENCE
P2.0 - BASEMENT WASTE & VENT PLAN
P2.1 - FIRST FLOOR WASTE & VENT PLAN
P2.2 - SECOND FLOOR WASTE & VENT PLAN
P3.0 - BASEMENT DOMESTIC WATER PLAN
P3.1 - FIRST FLOOR DOMESTIC WATER PLAN
P3.2 - SECOND FLOOR DOMESTIC WATER PLAN

ELECTRICAL
E0.0 - ELECTRICAL TITLE SHEET
E1.0 - BASEMENT LIGHTING PLAN
E1.1 - FIRST AND SECOND FLOOR LIGHTING PLAN
E2.0 - BASEMENT POWER PLAN
E2.1 - FIRST AND SECOND FLOOR POWER PLAN
E3.0 - BASEMENT MECHANICAL POWER PLAN
E3.1 - FIRST AND SECOND FLOOR MECHANICAL POWER PLAN
E4.0 - LOAD ANALYSIS AND ONE LINE DIAGRAM
E4.1 - SCHEDULES

CURRENT DWG LIST UNDER EDIT

PRELIMINARY - NOT FOR CONSTRUCTION

POST OFFICE BOX 1249
265 EAST KELLY AVENUE
JACKSON, WYOMING 83001
T: 307.733.4364
F: 307.733.4365
info@hawtinjorgensen.com

Hawtin Jorgensen ARCHITECTS

Drawn By:
Checked By: Arne Jorgensen

BROWSE 'N BUY BUILDING
DESIGN DEVELOPMENT
ST. JOHN'S EPISCOPAL CHURCH
CACHE STREET CAMPUS
JACKSON, WYOMING

SHEET TITLE:
TITLE SHEET

DATE: 11/12/24
REVISIONS:

50% DD 1/13/25

DRC AND DEV SUBMITTAL 2/18/25

DRAWING NUMBER:
A0.1

SCALE ACCURATE ON 24 X 36 SHEETS

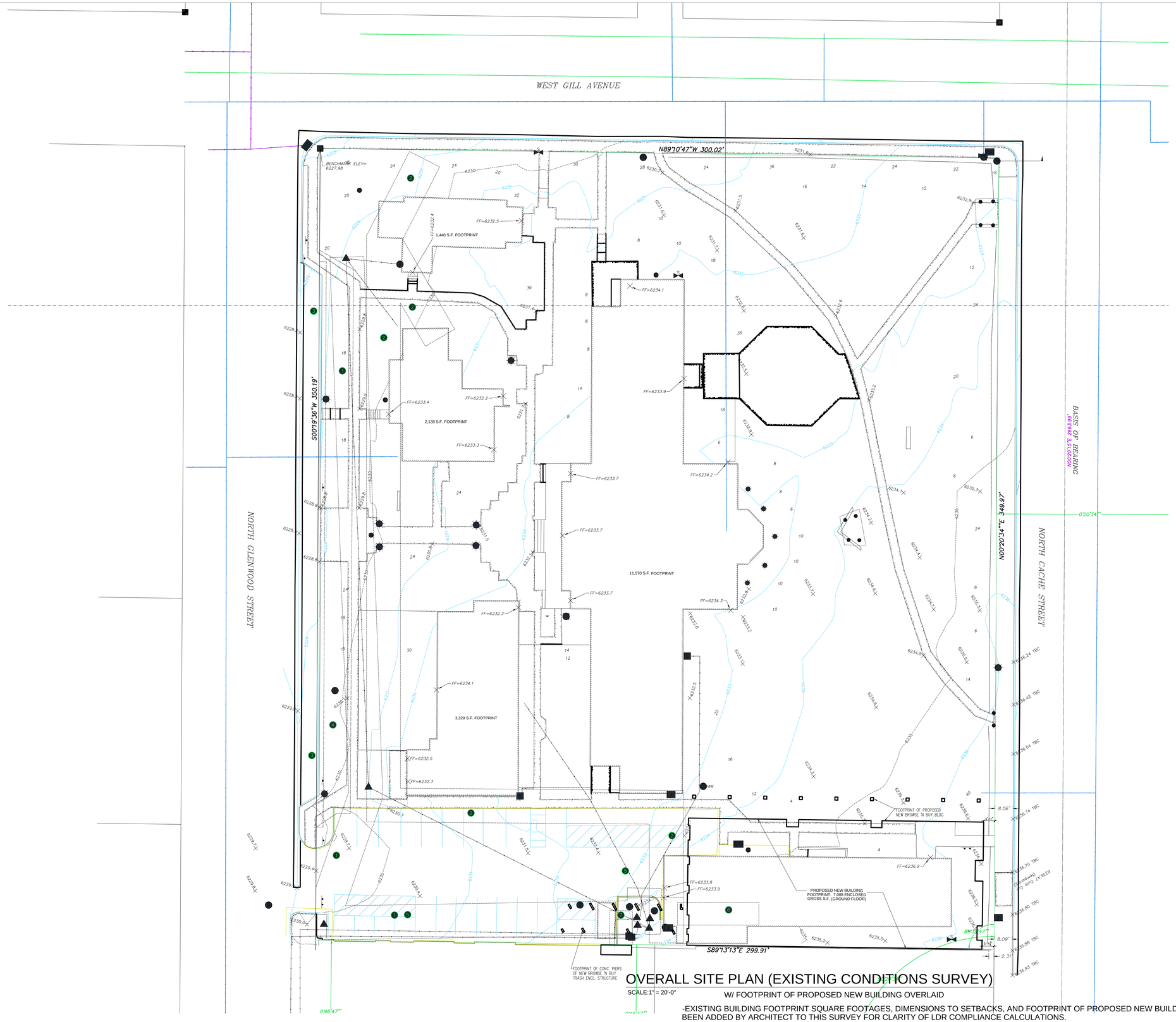

OVERALL SITE PLAN (EXISTING CONDITIONS SURVEY)

SCALE:1" = 20'-0"

W/ FOOTPRINT OF PROPOSED NEW BUILDING OVERLAID

-EXISTING BUILDING FOOTPRINT SQUARE FOOTAGES, DIMENSIONS TO SETBACKS, AND FOOTPRINT OF PROPOSED NEW BUILDING, HAVE BEEN ADDED BY ARCHITECT TO THIS SURVEY FOR CLARITY OF LDR COMPLIANCE CALCULATIONS.

-SURVEY IS FROM JORGENSEN ASSOCIATES, "TOPOGRAPHIC SURVEY ST. JOHN'S EPISCOPAL CHURCH CAMPUS", DATED 11/15/23.

PRELIMINARY - NOT FOR CONSTRUCTION

LICENSED ARCHITECT
ARNE OLUF JORGENSEN
(S-0144)
STATE OF WYOMING

POST OFFICE BOX 1249
265 EAST KELLY AVENUE
JACKSON, WYOMING 83001
T: 307.733.4364
F: 307.733.4365
info@hawtinjorgensen.com

Hawtin Jorgensen ARCHITECTS

Drawn By:
Checked By: Arne Jorgensen

BROWSE 'N BUY BUILDING

DESIGN REVIEW COMMITTEE SUBMITTAL

ST. JOHN'S EPISCOPAL CHURCH CACHE STREET CAMPUS

JACKSON, WYOMING

SHEET TITLE: OVERALL SITE PLAN

DATE: 5/22/24

REVISIONS:

DEV SUBMITTAL 2/18/25

DRC FINAL SUBMITTAL 4/22/25

DEV RESUBMITTAL 5/27/25

DRAWING NUMBER: A1.1

SCALE ACCURATE ON 24 X 36 SHEETS

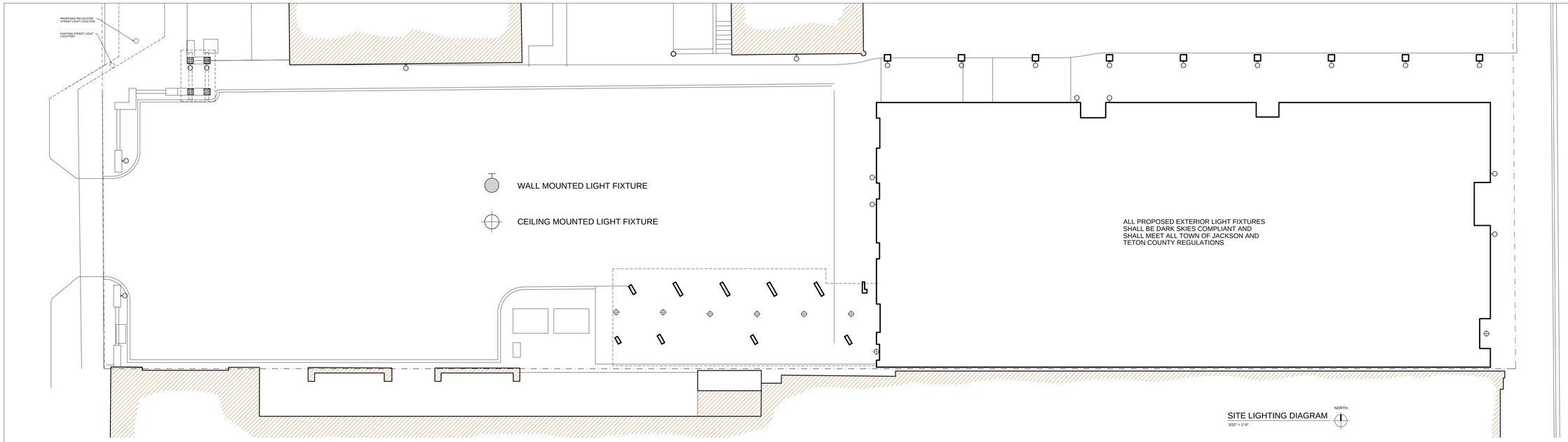

SITE LIGHTING DIAGRAM
3/32" = 1'-0"

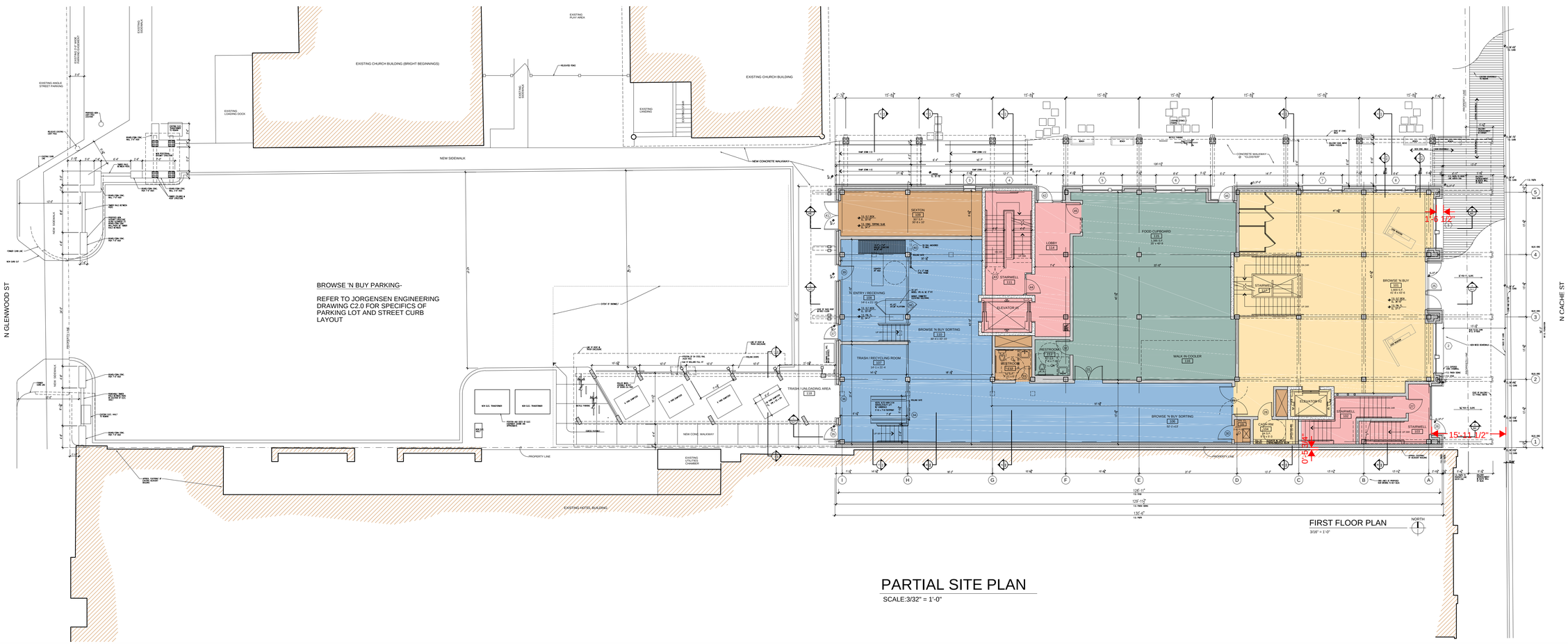

FIRST FLOOR PLAN
3/16" = 1'-0"

PARTIAL SITE PLAN
SCALE:3/32" = 1'-0"

PRELIMINARY - NOT FOR CONSTRUCTION

LICENSED ARCHITECT
ANNE OLUFS JORGENSEN
(S-0144)
STATE OF WYOMING

POST OFFICE BOX 1249
265 EAST KELLY AVENUE
JACKSON, WYOMING 83001
T: 307.733.4364
F: 307.733.4365
info@hawtinjorgensen.com

Hawtin Jorgensen ARCHITECTS

Drawn By:
Checked By: Anne Jorgensen

BROWSE 'N BUY BUILDING
DESIGN REVIEW COMMITTEE SUBMITTAL
JACKSON, WYOMING

ST. JOHN'S EPISCOPAL CHURCH
CACHE STREET CAMPUS

SHEET TITLE:
SITE PLAN

DATE: 9/10/24

REVISIONS:
DEV SUMBITTAL 2/18/25
DRC FINAL SUBMITTAL 4/22/25
DEV RESUBMITTAL 5/27/25

DRAWING NUMBER:
A1.3

SCALE ACCURATE ON 24 X 36 SHEETS

LEGEND OF USES IN NEW BUILDING, SQUARE FEET

USE TYPE	OCCUPANCY	BASEMENT NET S.F.	BASEMENT GROSS S.F.	FIRST FLOOR NET S.F.	FIRST FLOOR GROSS S.F.	SECOND FLOOR NET S.F.	SECOND FLOOR GROSS S.F.	TOTAL NET S.F.	TOTAL GROSS S.F.	OCCUPANT LOAD FACTOR (TABLE 1004.5)	NUMBER OF OCCUPANTS	S.F. OF USES IN EXISTING BLDG
BROWSE 'N BUY - MERCANTILE	M	2,100	2,309	1,715 [1]	1,940 [3]	2,035	2,219	5,850	6,468	60 GROSS S.F.	106	2,450 +/-
BROWSE 'N BUY - STORAGE & SORTING	S-1	1,134	1,266	2,044	2,194	1,433	1,554	4,611	5,014	300 GROSS S.F.	18	1,620 +/-
RECOVERY COMMUNITY	A-3	1,685	1,911					1,685	1,911	15 NET S.F.	114	930 +/-
JACKSON FOOD CUPBOARD	B / M			1,416	1,540			1,416	1,540	60 GROSS S.F.	25	0
RESIDENTIAL APARTMENTS (INCL. APARTMENT STORAGE ROOMS)	R-3					1,851	2,139	1,851	2,139	200 GROSS S.F.	10	0
MECHANICAL & COMMON (RESTROOMS, JANITOR'S CLOSETS, MECH. CHASES, SEXTON)	U	708	842	400	484	183	214	1,291	1,540	200 GROSS S.F.	-	
CIRCULATION & EGRESS	-	860	983	768	930	1,027	1,175	2,655	3,088			
TOTAL NET BUILDING S.F.		6,487		6,343		6,529		19,359				
TOTAL GROSS BUILDING S.F.			7,311		7,088		7,301		21,700			
EXTERIOR COVERED WALKWAY (CLOISTER)	-				1,430 [4]		-		23,130			
EXTERIOR COVERED DUMPSTER / UNLOADING AREA	-				1,097 [5]		-		24,227			
EXTERIOR SECOND FLOOR DECK	TO BE DETERMINED				-		1,533 [6]		25,760	TO BE DETERMINED	TO BE DETERMINED	
TOTAL GROSS FIRST FL (ENCLOSED + EXTERIOR COVERED) S.F.					9,615		-					
TOTAL GROSS SECOND FL (ENCLOSED + EXTERIOR DECK) S.F.							8,834					

NOTES:

1. AREA OF STAIR IN THE RETAIL SPACE IS DEDUCTED AT FIRST FLOOR LEVEL BUT IS COUNTED AT SECOND FLOOR AND BASEMENT LEVELS.
2. GROSS S.F. NUMBERS SHOWN ARE MEASURED INCLUDING EXTERIOR WALLS (MEASURED AT EXTERIOR FACE OF FINISH) WHICH ABUT A GIVEN PROGRAM AREA, AND AT CENTERLINE OF DEMISING PARTITIONS BETWEEN PROGRAM AREAS.
3. NET SQUARE FOOTAGE OF EACH PROGRAM AREA IS MEASURED AT INTERIOR FACE OF DEMISING PARTITIONS AND INTERIOR FACE OF EXTERIOR WALLS, AND EXCLUDES PARTITIONS WITHIN THE PROGRAM AREA.
4. LENGTH OF BLDG @ FIRST FLOOR x WIDTH OF CLOISTER MEASURED AT DRIPLINE OF BALCONY AND SHED ROOFS ABOVE.
5. AREA WITHIN DRIPLINE OF ROOF OF TRASH ENCLOSURE.
6. MEASURED @ INSDE FACE OF RAILING.

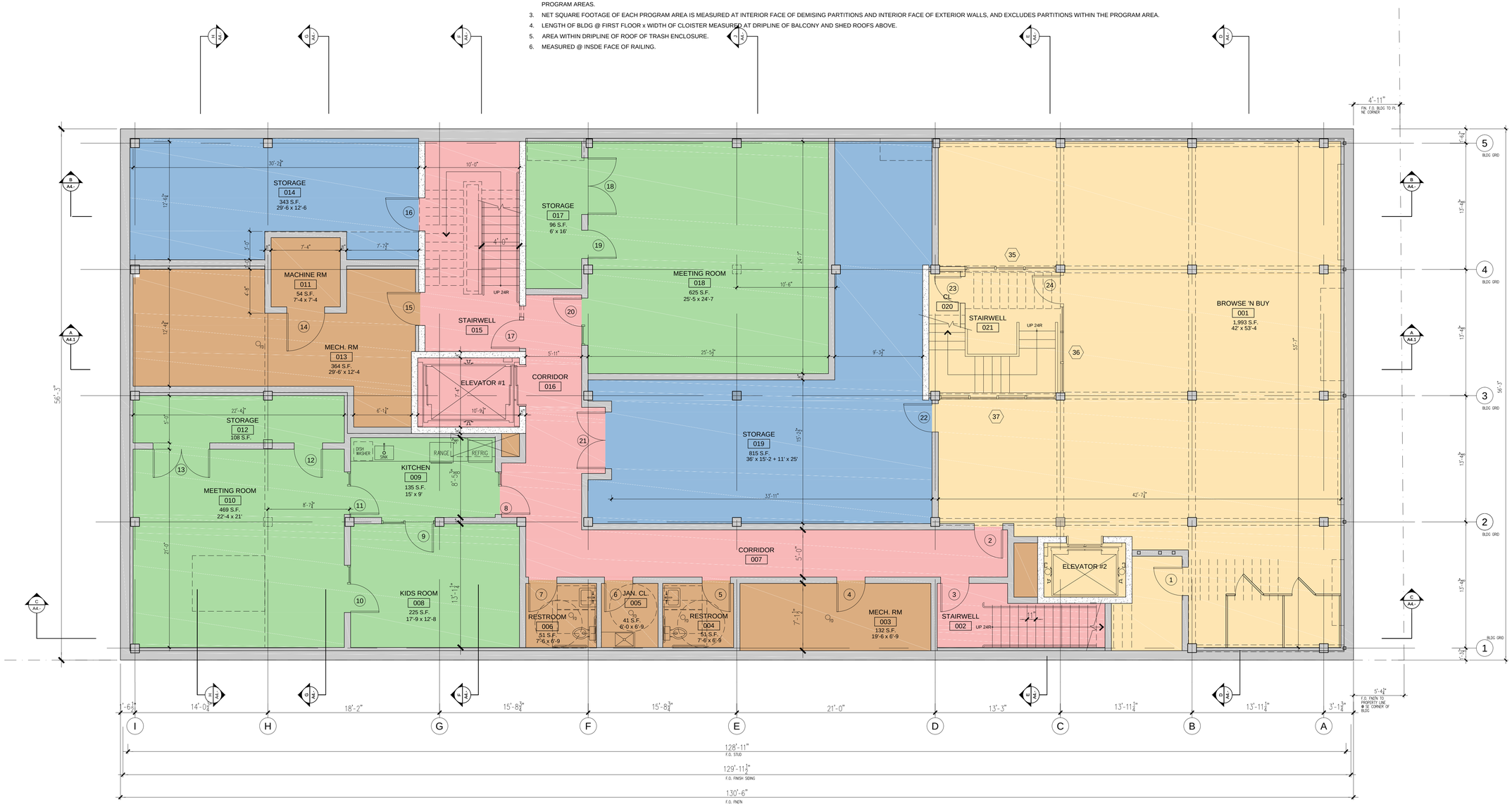

BASEMENT FLOOR PLAN

3/16" = 1'-0"

NORTH

PRELIMINARY - NOT FOR CONSTRUCTION

POST OFFICE BOX 1249
265 EAST KELLY AVENUE
JACKSON, WYOMING 83001
T: 307.733.4364
F: 307.733.4365
info@hawtinjorgensen.com

Hawtin Jorgensen ARCHITECTS

Drawn By:
Checked By: Arne Jorgensen

BROWSE 'N BUY BUILDING

DESIGN REVIEW COMMITTEE SUBMITTAL

ST. JOHN'S EPISCOPAL CHURCH CACHE STREET CAMPUS

JACKSON, WYOMING

SHEET TITLE: BASEMENT PLAN

DATE: 9/10/24

REVISIONS:

DEV SUBMITTAL 2/18/25

DRC FINAL SUBMITTAL 4/22/25

DEV RESUBMITTAL 5/27/25

DRAWING NUMBER: A2.2

SCALE ACCURATE ON 24 X 36 SHEETS

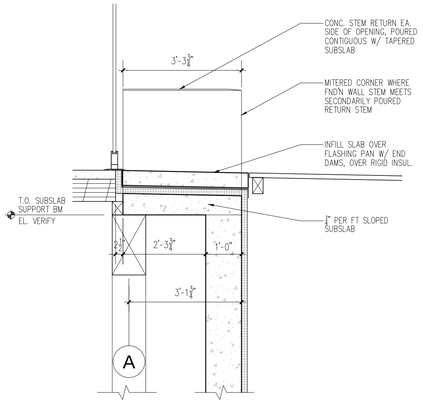

A A2.2 FOUND'N DETAIL
SCALE: 1/2 = 1'-0"

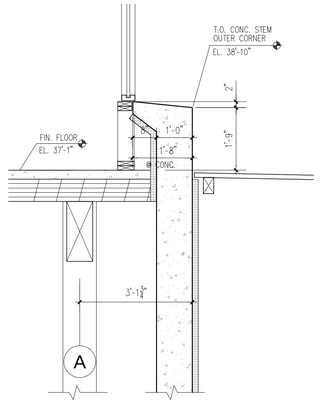

B A2.2 FOUND'N DETAIL
SCALE: 1/2 = 1'-0"

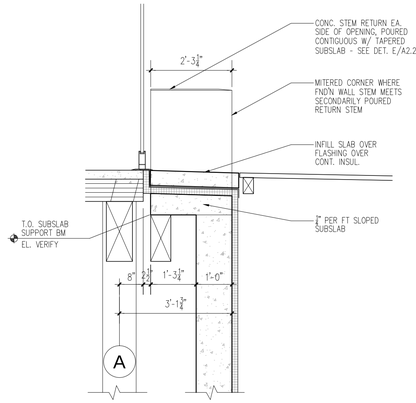

C A2.2 FOUND'N DETAIL
SCALE: 1/2 = 1'-0"

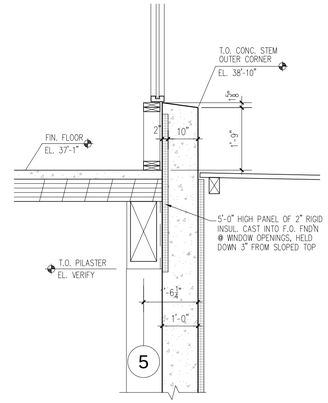

D A2.2 FOUND'N DETAIL
SCALE: 1/2 = 1'-0"

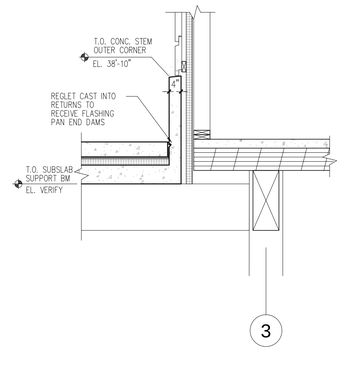

E A2.2 FOUND'N DETAIL
SCALE: 1/2 = 1'-0"

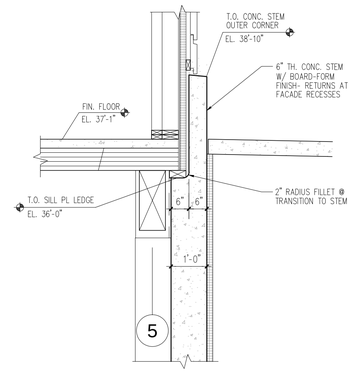

F A2.2 FOUND'N DETAIL
SCALE: 1/2 = 1'-0"

TYPICAL FOUNDATION STEM WHERE CLT FLOOR PLATE BEARS ON FOUNDATION WALL (NORTH WALL SHOWN)

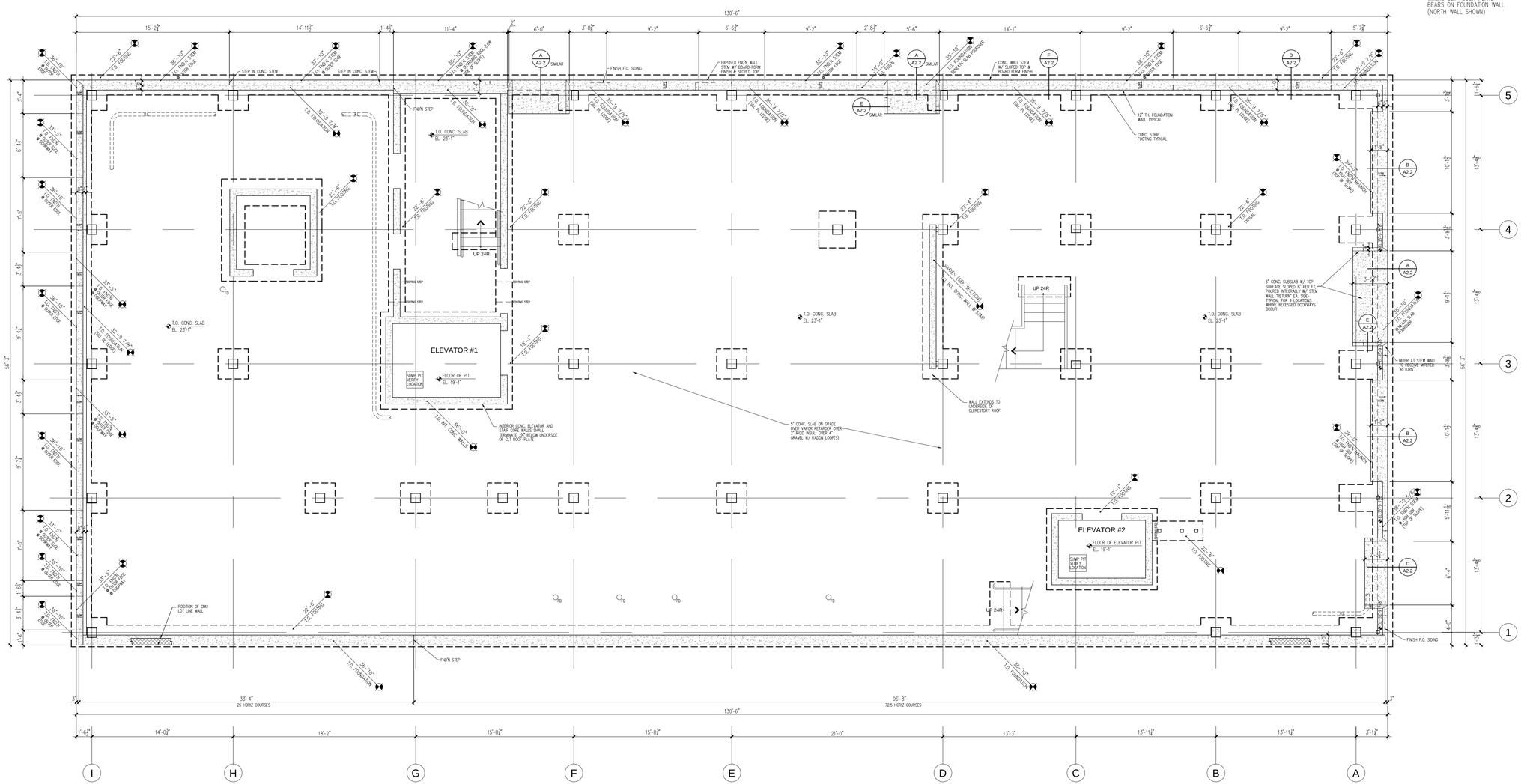

FOUNDATION PLAN

3/16" = 1'-0"

NORTH

PRELIMINARY - NOT FOR CONSTRUCTION

LICENSED ARCHITECT
ARNE OLUFS JORGENSEN
(S-0144)
STATE OF WYOMING

POST OFFICE BOX 1249
265 EAST KELLY AVENUE
JACKSON, WYOMING 83001
T: 307.733.4364
F: 307.733.4365
info@hawtinjorgensen.com

Hawtin Jorgensen ARCHITECTS

Drawn By:
Checked By: Arne Jorgensen

BROWSE 'N BUY BUILDING

DESIGN DEVELOPMENT

JACKSON, WYOMING

ST. JOHN'S EPISCOPAL CHURCH
CACHE STREET CAMPUS

SHEET TITLE:
FOUNDATION PLAN

DATE: 11/12/24

REVISIONS:
DRC AND DEV SUBMITTAL 2/18/25

DEV RESUBMITTAL 5/27/25

DRAWING NUMBER:
A2.1

SCALE ACCURATE ON 24 X 36 SHEETS

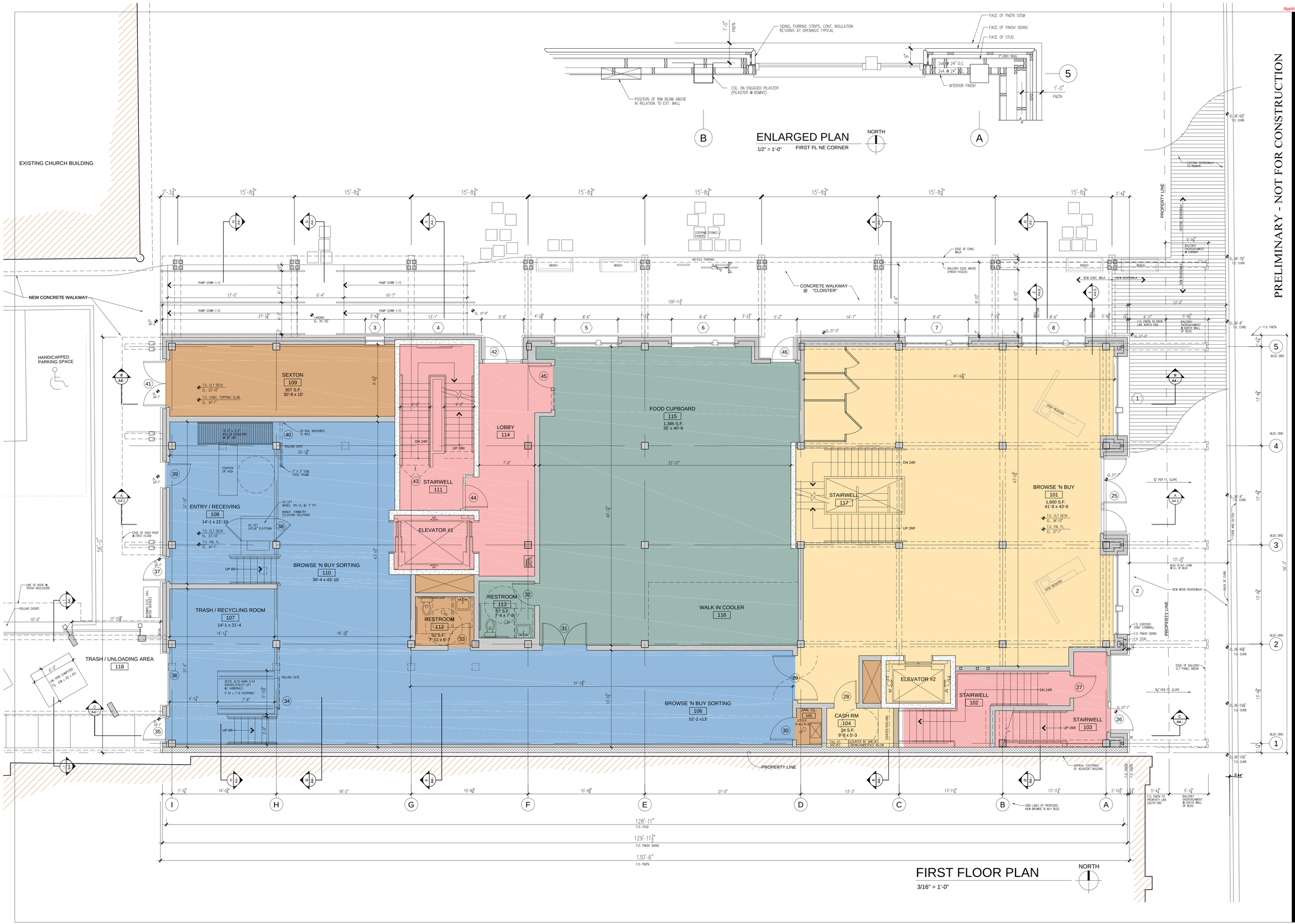

FIRST FLOOR PLAN
3/16" = 1'-0"

PRELIMINARY - NOT FOR CONSTRUCTION

POST OFFICE BOX 1249
265 EAST KELLY AVENUE
JACKSON, WYOMING 83001
T: 307.733.4364
F: 307.733.4365
info@hawtinjorgensen.com

Hawtin Jorgensen ARCHITECTS

Drawn By:
Checked By: Arne Jorgensen

BROWSE 'N BUY BUILDING
DESIGN REVIEW COMMITTEE SUBMITTAL
ST. JOHN'S EPISCOPAL CHURCH
CACHE STREET CAMPUS
JACKSON, WYOMING

SHEET TITLE: FIRST FLOOR PLAN

DATE: 1/15/25

REVISIONS:
DEV SUBMITTAL 2/18/25
DRC FINAL SUBMITTAL 4/22/25
DEV RESUBMITTAL 5/27/25

DRAWING NUMBER:
A2.3

SCALE ACCURATE ON 24 X 36 SHEETS

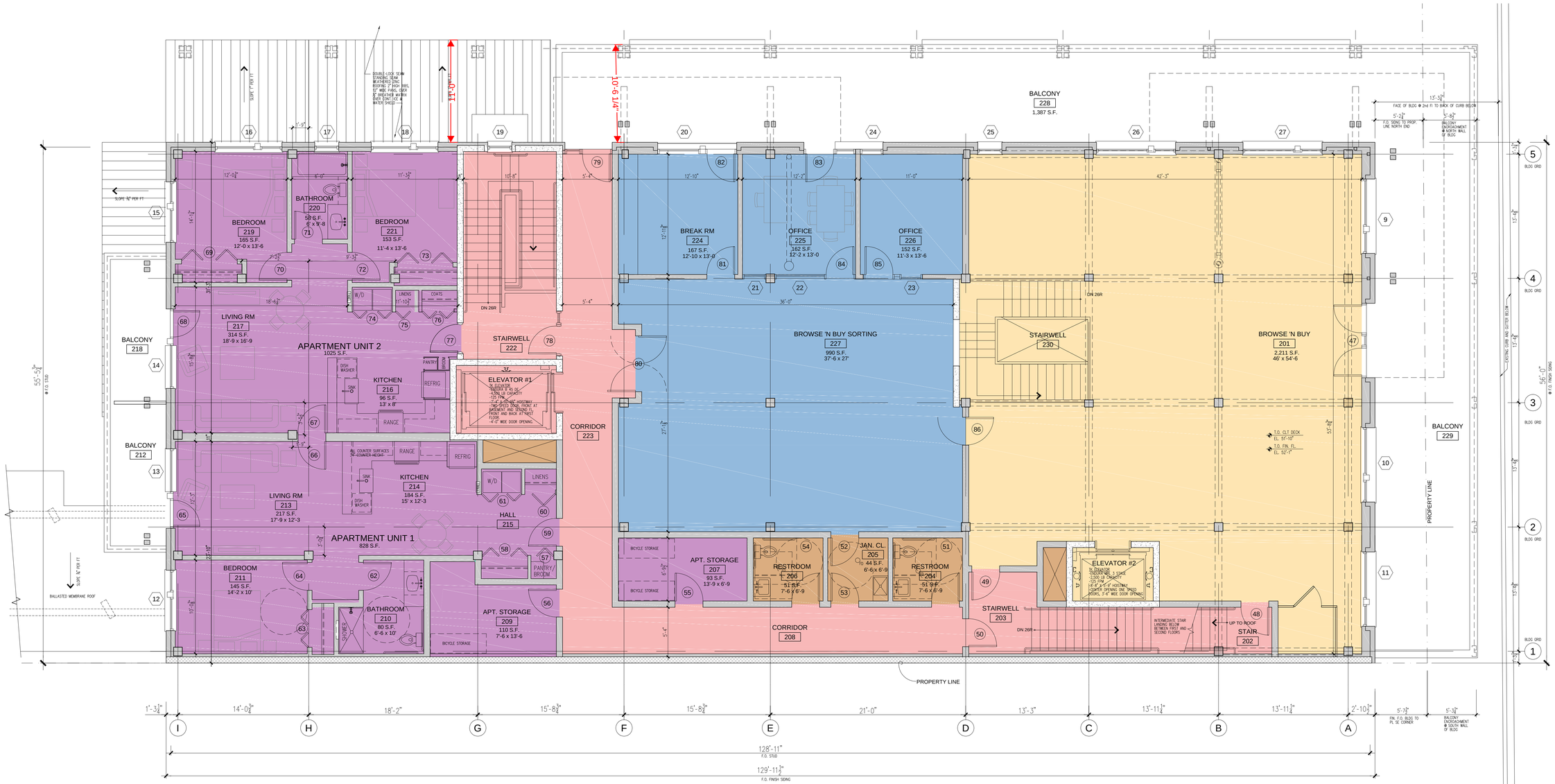

SECOND FLOOR PLAN

3/16" = 1'-0"

NORTH

PRELIMINARY - NOT FOR CONSTRUCTION

POST OFFICE BOX 1249
265 EAST KELLY AVENUE
JACKSON, WYOMING 83001
T: 307.733.4364
F: 307.733.4365
info@hawtinjorgensen.com

Hawtin Jorgensen ARCHITECTS

Checked By: Arne Jorgensen
Drawn By:

BROWSE 'N BUY BUILDING

DESIGN REVIEW COMMITTEE SUBMITTAL

JACKSON, WYOMING

ST. JOHN'S EPISCOPAL CHURCH
CACHE STREET CAMPUS

SHEET TITLE: SECOND FLOOR PLAN

DATE: 9/10/24

REVISIONS:

DEV SUBMITTAL 2/18/25

DRC FINAL SUBMITTAL 4/22/25

DEV RESUBMITTAL 5/27/25

DRAWING NUMBER:

A2.4

SCALE ACCURATE ON 24 X 36 SHEETS

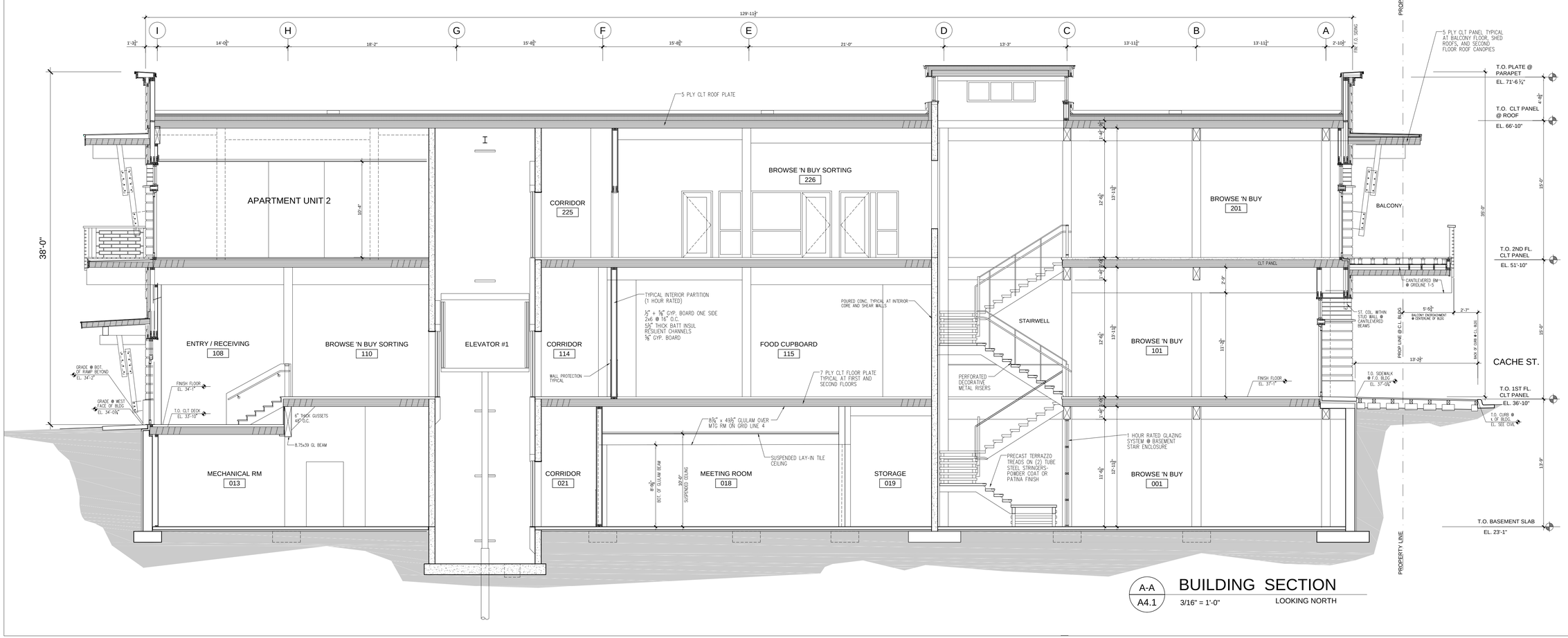

A-A
A4.1

BUILDING SECTION

3/16" = 1'-0"

LOOKING NORTH

PRELIMINARY - NOT FOR CONSTRUCTION

Hawtin Jorgensen ARCHITECTS
POST OFFICE BOX 1249
265 EAST KELLY AVENUE
JACKSON, WYOMING 83001
T: 307.733.4364
F: 307.733.4365
info@hawtinjorgensen.com
Drawn By:
Checked By: Arne Jorgensen

Browse 'N Buy Building

Design Development

St. John's Episcopal Church
Cache Street Campus

Jackson, Wyoming

Sheet Title:
PRELIM SECTIONS

Date: 9/10/24

Revisions:
DEV SUMBITTAL 2/18/25

DEV RESUBMITTAL 5/27/25

Drawing Number:
A4.1

SCALE ACCURATE ON 24 X 36 SHEETS

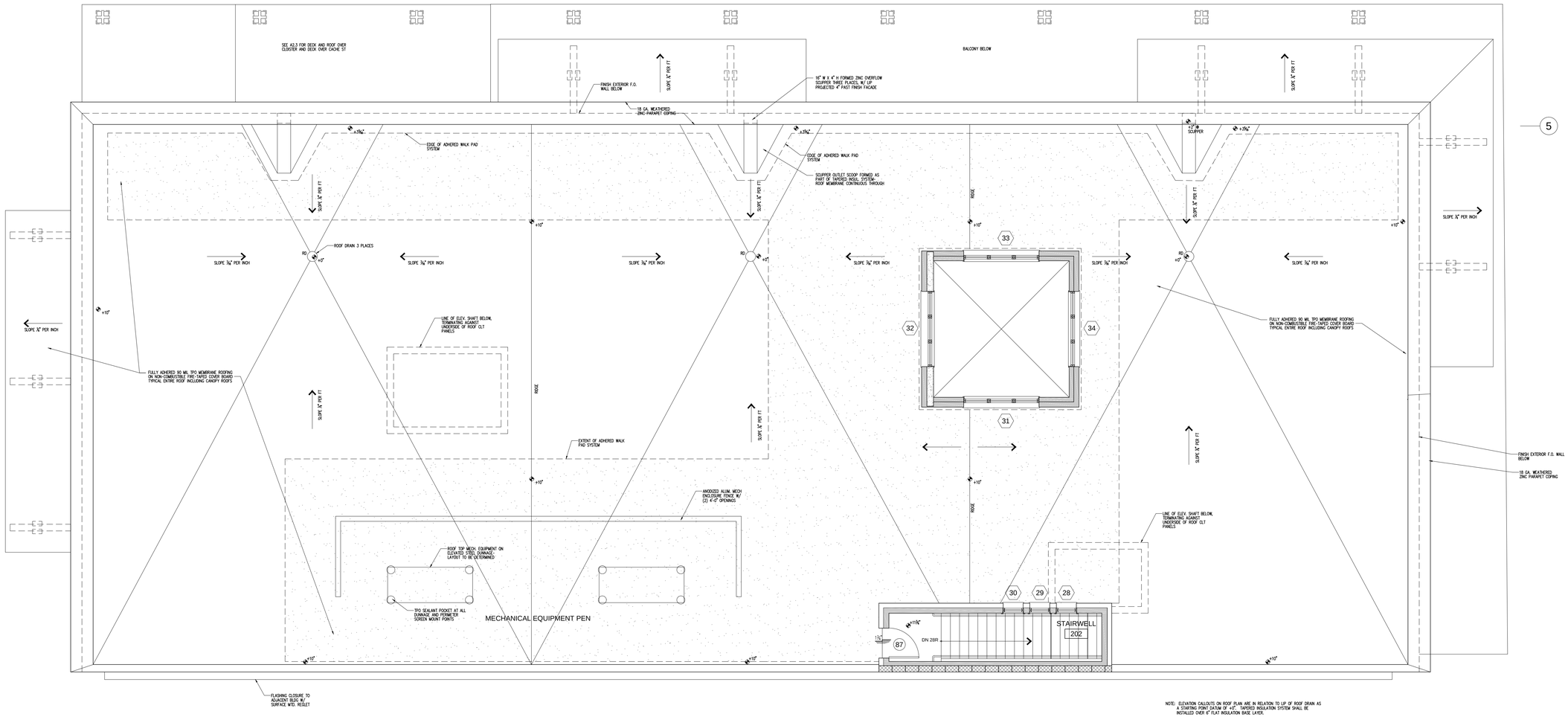

NOTE: ELEVATION CALLOUTS ON ROOF PLAN ARE IN RELATION TO LIP OF ROOF DRAIN AS A STARTING POINT DATUM OF +0". TAPERED INSULATION SYSTEM SHALL BE INSTALLED OVER 6" FLAT INSULATION BASE LAYER.

ROOF PLAN

3/16" = 1'-0"

NORTH

PRELIMINARY - NOT FOR CONSTRUCTION

POST OFFICE BOX 1249
265 EAST KELLY AVENUE
JACKSON, WYOMING 83001
T: 307.733.4364
F: 307.733.4365
info@hawtinjorgensen.com

Hawtin Jorgensen ARCHITECTS

Drawn By:
Checked By: Arne Jorgensen

BROWSE 'N BUY BUILDING

DESIGN REVIEW COMMITTEE SUBMITTAL

ST. JOHN'S EPISCOPAL CHURCH
CACHE STREET CAMPUS

JACKSON, WYOMING

SHEET TITLE:
ROOF PLAN

DATE: 9/10/24

REVISIONS:
50% DESIGN DEVELOPMENT 1/15/25
DRC AND DEV SUBMITTAL 2/18/25

DRAWING NUMBER:
A2.5

SCALE ACCURATE ON 24 X 36 SHEETS

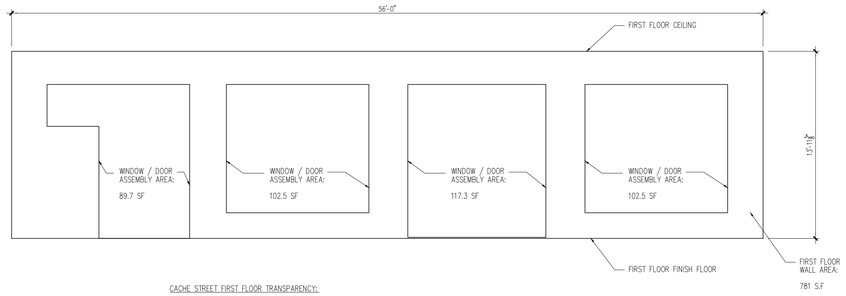

CACHE STREET FIRST FLOOR TRANSPARENCY:

WINDOW OPENINGS IN FIRST FLOOR FACADE: 89.7 + 102.5 + 117.3 + 102.5 = 410.2 S.F.

FIRST FLOOR WALL AREA MEASURED AT EXTERIOR WALL = 56'-0" X 13'-11⅞" CEILING HEIGHT = 781 S.F.

410.2 / 781 = 52.5% TRANSPARENCY

TRANSPARENCY STUDY

SCALE: 3/16" = 1'-0"

EAST ELEVATION

SCALE: 3/16" = 1'-0"

SEE SHT. A3.3 FOR CONTINUATION

NORTH ELEVATION

SCALE: 3/16" = 1'-0"

PRELIMINARY - NOT FOR CONSTRUCTION

POST OFFICE BOX 1249
265 EAST KELLY AVENUE
JACKSON, WYOMING 83001
T: 307.733.4364
F: 307.733.4365
info@hawtinjorgensen.com

Hawtin Jorgensen ARCHITECTS

Checked By: Arne Jorgensen
Drawn By:

BROWSE 'N BUY BUILDING

DESIGN REVIEW COMMITTEE SUBMITTAL

JACKSON, WYOMING

ST. JOHN'S EPISCOPAL CHURCH
CACHE STREET CAMPUS

SHEET TITLE:

ELEVATIONS

DATE: 9/10/24

REVISIONS:

DEV SUBMITTAL 2/18/25

DRC FINAL SUBMITTAL 4/22/25

DEV RESUBMITTAL 5/27/25

DRAWING NUMBER:

A3.1

SCALE ACCURATE ON 24 X 36 SHEETS

WEST ELEVATION

SCALE: 3/16" = 1'-0"

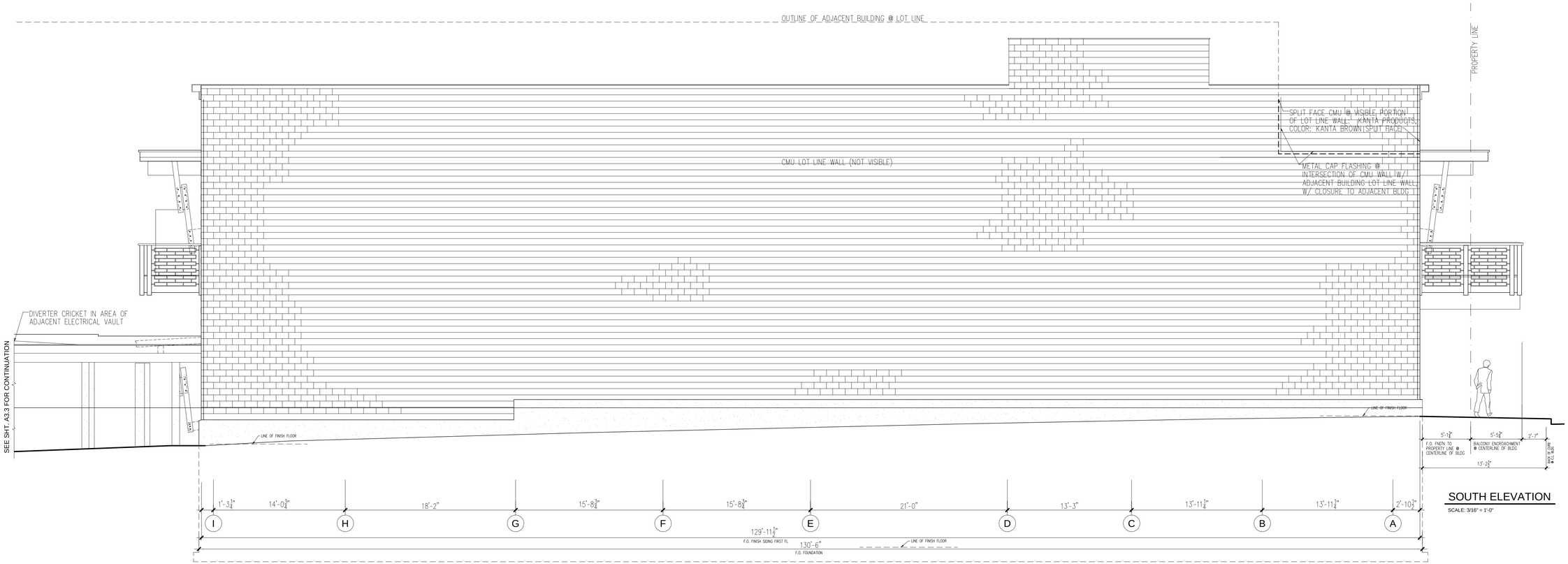

SOUTH ELEVATION

SCALE: 3/16" = 1'-0"

PRELIMINARY - NOT FOR CONSTRUCTION

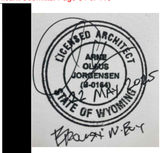

POST OFFICE BOX 1249
265 EAST KELLY AVENUE
JACKSON, WYOMING 83001
T: 307.733.4364
F: 307.733.4365
info@hawtinjorgensen.com

Hawtin Jorgensen ARCHITECTS

Drawn By:
Checked By: Arne Jorgensen

Browse 'N Buy Building

Design Review Committee Submittal

St. John's Episcopal Church
Cache Street Campus

Jackson, Wyoming

Sheet Title:
Elevations

Date: 9/10/24

Revisions:
DEV Submittal 2/18/25
DRC Final Submittal 4/22/25
DEV Resubmittal 5/27/25

Drawing Number:
A3.2

Scale Accurate on 24 x 36 Sheets

OVERALL NORTH ELEVATION

SCALE: 1/8" = 1'-0"

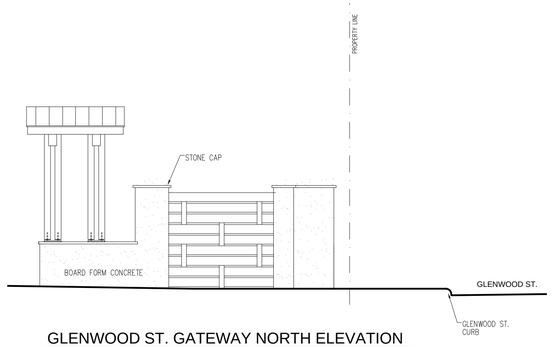

GLENWOOD ST. GATEWAY NORTH ELEVATION

SCALE: 3/16" = 1'-0"

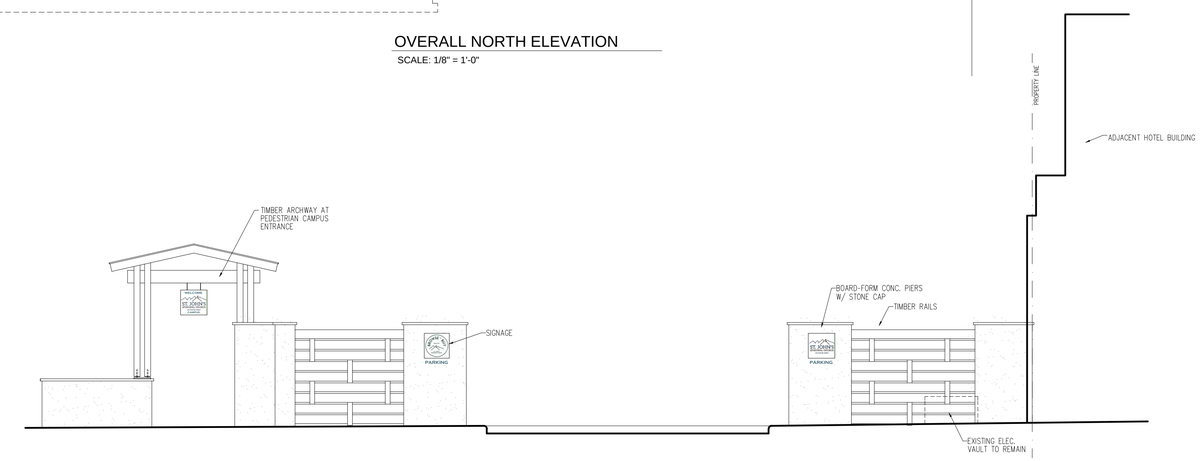

GLENWOOD ST. GATEWAY ELEVATION

SCALE: 3/16" = 1'-0" (WEST ELEVATION)

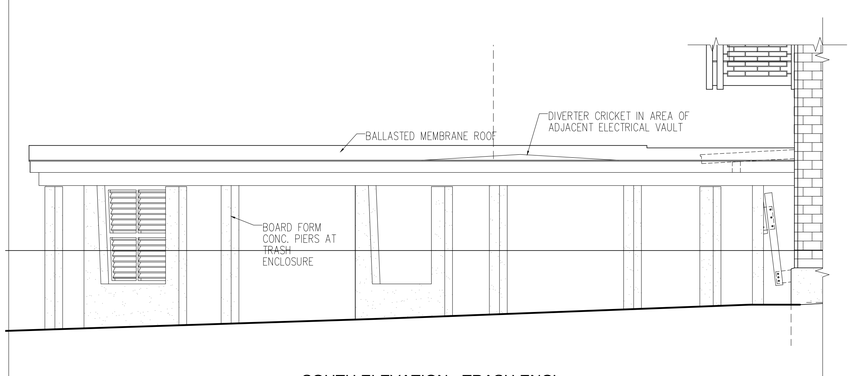

SOUTH ELEVATION - TRASH ENCL.

SCALE: 3/16" = 1'-0"

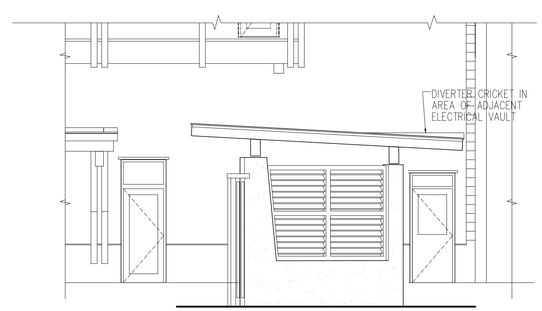

WEST ELEVATION - TRASH ENCL.

SCALE: 3/16" = 1'-0"

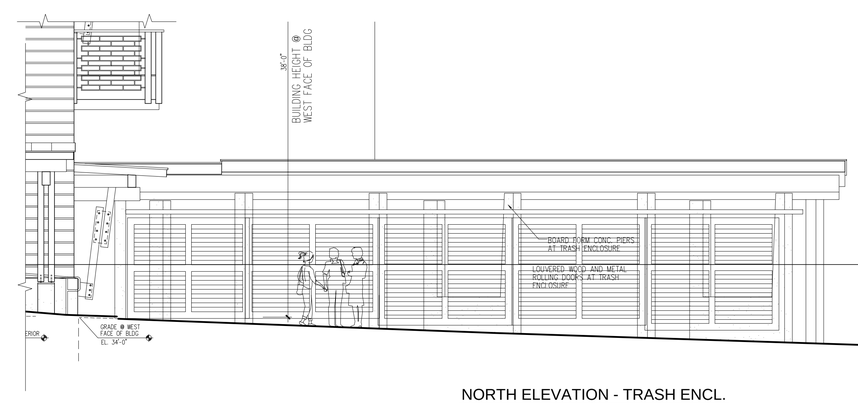

NORTH ELEVATION - TRASH ENCL.

SCALE: 3/16" = 1'-0"

PRELIMINARY - NOT FOR CONSTRUCTION

LICENSED ARCHITECT
ARNE OLUF JORGENSEN
(S-0164)
STATE OF WYOMING

POST OFFICE BOX 1249
265 EAST KELLY AVENUE
JACKSON, WYOMING 83001
T: 307.733.4364
F: 307.733.4365
info@hawtinjorgensen.com

Hawtin Jorgensen ARCHITECTS

Checked By: Arne Jorgensen
Drawn By:

Browse 'N Buy Building

Design Review Committee Submittal

St. John's Episcopal Church
Cache Street Campus
Jackson, Wyoming

Sheet Title:
Elevations

Date: 9/10/24

Revisions:
DEV Submittal 2/18/25
DRC Final Submittal 4/22/25
DEV Resubmittal 5/27/25

Drawing Number:
A3.3

Scale Accurate on 24 x 36 Sheets

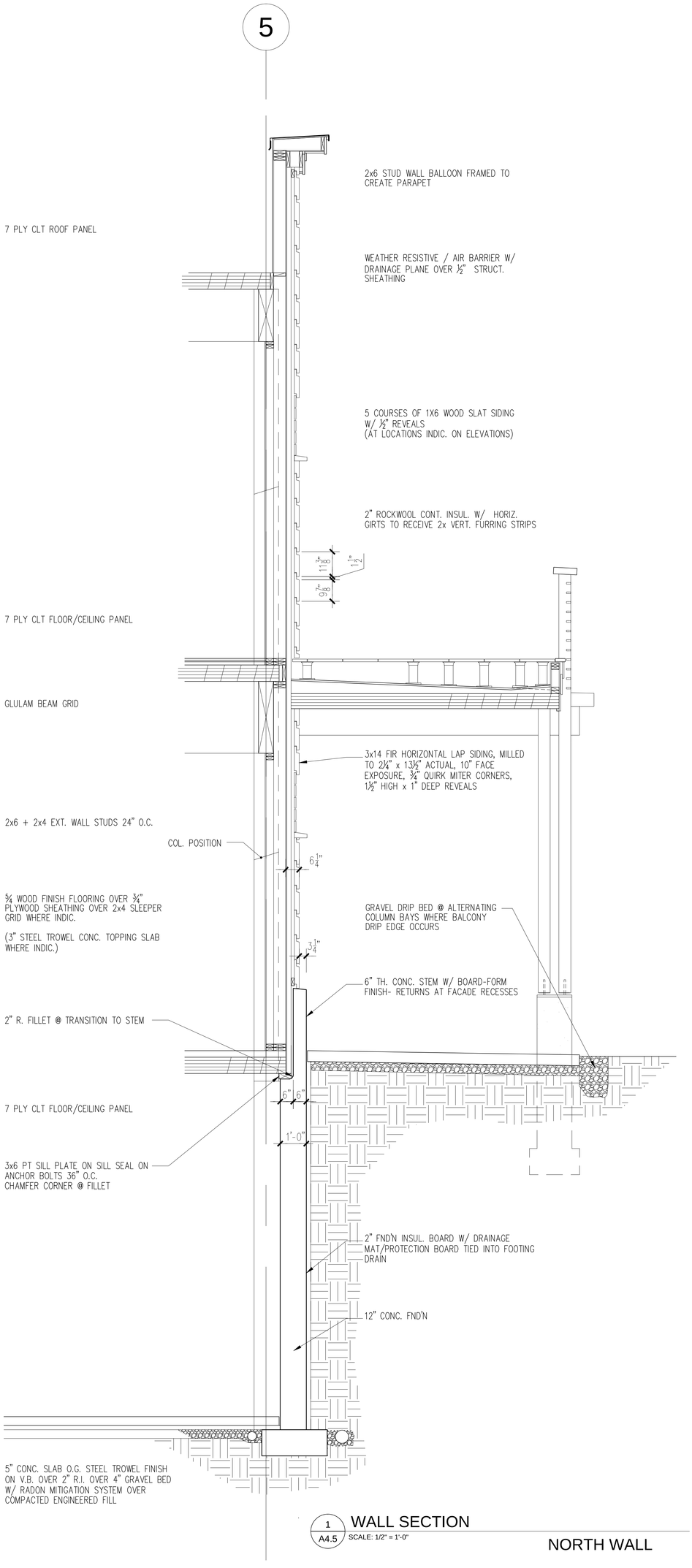

1 / A4.5 WALL SECTION

SCALE: 1/2" = 1'-0"

NORTH WALL

PRELIMINARY - NOT FOR CONSTRUCTION

Drawing Number: A4.5

Scale Accurate on 24x36 Sheets

Date: 9/10/24

Revisions: DRC and DEV Submittal 2/18/25

Sheet Title: Wall Section

Browse 'n Buy Building

Design Development

St. John's Episcopal Church
Cache Street Campus

Jackson, Wyoming

Hawtin Jorgensen Architects
POST OFFICE BOX 1249
265 EAST KELLY AVENUE
JACKSON, WYOMING 83001
T: 307.733.4364
F: 307.733.4365
info@hawtinjorgensen.com

Drawn By:

Checked By: Arne Jorgensen

Approximate Boundary of Parcel 011

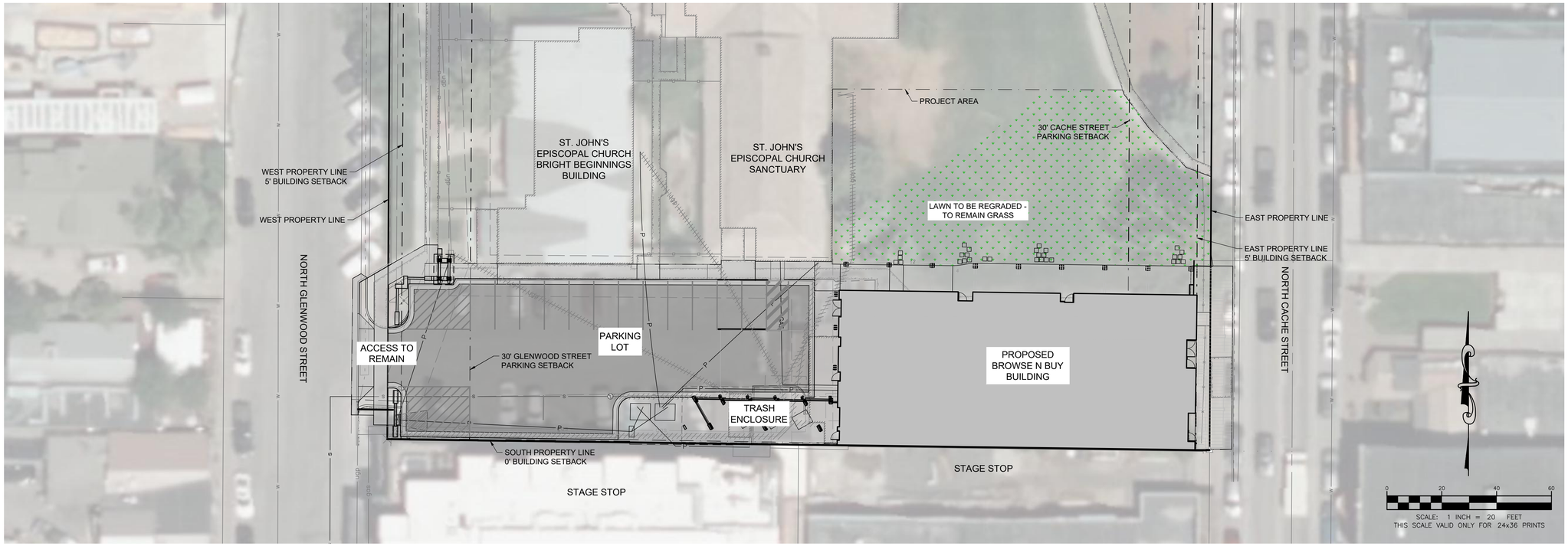

SITE DEVELOPMENT NOTES:

1. BUILDING SETBACKS IN THE TS-2 AND DC-2 ZONES ARE 0' OR 5' MINIMUM. THE PROPOSED DEVELOPMENT UTILIZES A 0' SETBACK ON THE SOUTH BOUNDARY AND A GREATER THAN 5' SETBACK ON ALL OTHER SIDES
2. THE CANOPY OVERHANG ON THE EAST FACE OF THE BUILDING SHALL BE PERMITTED THROUGH WYDOT ACCORDING TO OPERATING POLICY 19-09.
3. A PUBLIC RIGHT-OF-WAY PERMIT (PROW) SHALL BE ACQUIRED FOR ALL WORK WITHIN THE TOWN OF JACKSON RIGHT-OF-WAY.
4. SHOULD UTILITY RELATED WORK BE REQUIRED IN THE CACHE STREET (WYDOT) RIGHT-OF-WAY, AN M-21 UTILITY LICENSE WILL NEED TO BE ACQUIRED (FOR EACH UTILITY SEPARATELY), THROUGH COORDINATION WITH THE TOWN OF JACKSON, THE UTILITY OWNER AND WYDOT.

GENERAL CONSTRUCTION NOTES & SPECIFICATIONS:

1. ALL SITE WORK SHALL BE PERFORMED IN ACCORDANCE WITH THE LATEST EDITION OF WYOMING PUBLIC WORKS STANDARD SPECIFICATIONS AND THE TOWN OF JACKSON LAND DEVELOPMENT REGULATIONS. ANY CONSTRUCTION RELATED ACTIVITIES NOT IN CONFORMANCE WITH APPROVED AND PERMITTED PLANS AND/OR SEQUENCING MAY RESULT IN TERMINATION OF WORK.
2. THE APPROVED BUILDING PERMIT SHALL BE KEPT ON SITE. EROSION CONTROL MEASURES SHALL BE INSPECTED AFTER EACH RAIN AND AT LEAST ONCE EACH WEEK. EROSION DAMAGE TO ADJOINING SURFACES AND DRAINAGE WAYS AS A RESULT OF LAND DEVELOPING OR DISTURBING ACTIVITIES SHALL BE REPAIRED IMMEDIATELY.
3. THE TOWN ENGINEER SHALL BE ALLOWED TO ENTER THE SITE FOR THE PURPOSE OF INSPECTING COMPLIANCE WITH THE EROSION CONTROL PLAN OR FOR PERFORMING ANY WORK NECESSARY TO BRING THE SITE INTO COMPLIANCE WITH THE EROSION CONTROL PLAN.
4. COPIES OF ALL AGREEMENTS AND/OR EASEMENTS SHALL BE PROVIDED TO THE TOWN OF JACKSON PRIOR TO GRADING ON ADJACENT PROPERTIES FOR TEMPORARY OR PERMANENT CONSTRUCTION ACTIVITIES.
5. CONSTRUCTION WORK HOURS SHALL BE CONSISTENT WITH CURRENT TOWN OF JACKSON POLICIES.
6. ALL PUBLIC STREETS SHALL BE MAINTAINED CLEAR OF DEBRIS DURING CONSTRUCTION. SHOULD DEBRIS BE TRACKED ONTO PUBLIC STREETS FROM THE CONSTRUCTION SITE, IT SHALL BE THE CONTRACTOR'S RESPONSIBILITY TO CLEAN THE AFFECTED STREETS.
7. CONSTRUCTION SITE DELINEATION FENCING SHALL BE PROVIDED AS NEEDED TO PROTECT THE PUBLIC FROM HAZARDS DURING CONSTRUCTION. THE FENCE SHALL REMAIN IN PLACE AND INTACT FOR AS LONG AS NECESSARY TO PROTECT THE PUBLIC.
8. APPROVED SEDIMENTATION CONTROLS AND SILT RETENTION SHALL BE PLACED AND PROVIDED DURING CONSTRUCTION AS NEEDED TO PREVENT OFFSITE STORM FLOW AS IDENTIFIED IN THE APPROVED GRADING AND EROSION CONTROL PLAN. THE TOWN ENGINEER SHALL BE NOTIFIED UPON COMPLETION OF EROSION CONTROL MEASURES WITHIN 2 CALENDAR DAYS AFTER INSTALLATION.
9. IF NECESSARY, IT IS THE CONTRACTOR'S RESPONSIBILITY TO OBTAIN A WYOMING DEPARTMENT OF ENVIRONMENTAL QUALITY WYPDES STORMWATER PERMIT AND / OR CONSTRUCTION DEWATERING PERMIT PRIOR TO COMMENCING ANY LAND DISTURBING ACTIVITIES.
10. CONTRACTOR SHALL VERIFY LOCATION OF ALL BURIED AND OVERHEAD UTILITIES PRIOR TO ANY EXCAVATION IN THE VICINITY. UTILITY LOCATIONS SHOWN ON THESE DRAWINGS ARE APPROXIMATE AND BASED ON THE BEST INFORMATION AVAILABLE TO THE ENGINEER. ENGINEER DOES NOT WARRANT THE ACCURACY NOR COMPLETENESS OF THE INFORMATION SHOWN FOR EXISTING UTILITIES. CONTRACTOR SHALL COORDINATE WITH UTILITY COMPANIES PRIOR TO INSTALLING IMPROVEMENTS. PRIVATE UNDERGROUND UTILITIES EXIST IN THE PROJECT AREA. CONTACT ENGINEER TO LOCATE EXISTING WATER LINES, SEWER LINES.
11. BURIED UTILITY INFORMATION PRESENTED IN THIS PLAN SET ARE DRAWN FROM BEST AVAILABLE RECORD DRAWINGS AND VISIBLE INFRASTRUCTURE. CONTRACTOR SHALL VERIFY LOCATION OF ALL UTILITIES BEING CONNECTED TO INCLUDING COORDINATION WITH UTILITY OWNER, GETTING LOCATES AND POTHOLING IF NECESSARY.
12. CONTRACTOR SHALL VERIFY ALL DIMENSIONS IN THE FIELD AND SHALL PROMPTLY NOTIFY THE ENGINEER OF ANY VARIATIONS OR DISCREPANCIES.
13. ALL EXCAVATION ACTIVITIES SHALL COMPLY WITH PERMIT REQUIREMENTS ISSUED FOR THE PROJECT. CONTRACTOR SHALL REVIEW AND BE RESPONSIBLE FOR PERMIT COMPLIANCE.
14. FILL MATERIAL SHALL BE SUITABLE ON-SITE OR IMPORTED MATERIAL WITH ROCK NO LARGER THAN 6 INCHES IN DIAMETER. LARGER MATERIAL MAY BE PLACED ONLY WHEN AUTHORIZED BY THE ENGINEER.
15. SUBGRADE, PIT RUN SUBBASE, AND SITE FILL MATERIALS SHALL BE MECHANICALLY COMPACTED TO A MINIMUM OF 95% OF MAXIMUM DRY DENSITY AS DETERMINED BY ASTM D698 (AASHTO T-99 - STANDARD PROCTOR DENSITY) IN LIFTS NOT TO EXCEED 8 INCHES IN LOOSE THICKNESS.
16. CRUSHED GRAVEL BASE MATERIAL SHALL BE GRADING H OR GRADING W.
17. CRUSHED GRAVEL BASE COURSES SHALL BE MECHANICALLY COMPACTED TO A MINIMUM OF 95% OF MAXIMUM DRY DENSITY AS DETERMINED BY ASTM D1557 (AASHTO T-180 - MODIFIED PROCTOR DENSITY).
18. DESTRUCTION AND DAMAGE TO TREES AND OTHER NATURAL VEGETATION SHALL BE MINIMIZED AND ALL DISTURBED SURFACES SHALL BE RESEEDED AS SOON AS PRACTICABLE IN ACCORDANCE TO THE REVEGETATION SPECIFICATIONS.
19. STRIP AND SALVAGE TOPSOIL FROM CURRENTLY VEGETATED AREAS TO BE DISTURBED.
20. WEEDS SHALL BE CONTROLLED BY SPRAYING, LIMITING DISTURBANCE AREA, OR OTHER MEANS. FOLLOW INVASIVE SPECIES MANAGEMENT PLAN SUBMITTED WITH GRADING PERMIT. REDUCE THE SPREAD OF NOXIOUS WEEDS AND INTRODUCTION OF OTHER INVASIVE SPECIES PRIOR TO CONSTRUCTION, DURING CONSTRUCTION, DURING REVEGETATION, AND AFTER CONSTRUCTION.
21. FUGITIVE DUST WILL BE CONTROLLED BY WATERING DURING DRY PERIODS OR AS REQUIRED BY ENGINEER.
22. ANY DIRT, MUD OR DEBRIS TRACKED ONTO ADJACENT STREETS OR ALLEYS SHALL BE SWEPT UP ON A DAILY BASIS OR OTHERWISE REQUESTED BY THE TOWN OF JACKSON.
23. CONSTRUCTION SITE SHALL REMAIN CLEAN AND ALL TRASH AND CONSTRUCTION DEBRIS SHALL NOT ENTER INTO ADJACENT PROPERTIES OR STREETS.
24. ALL EXCAVATED MATERIALS SHALL BE STOCKPILED AND PROCESSED ON-SITE ONLY AT LOCATIONS AS DESIGNATED ON THE PLANS.
25. TOPS OF CUT AND FILL SLOPES SHALL BE ROUNDED TO AVOID RAVELING AND EROSION.
26. A FOUR INCH MINIMUM LAYER OF TOPSOIL SHALL BE PLACED ON ALL SLOPES AND AREAS STRIPPED FOR GRADING.
27. CUT AND FILL SLOPES SHALL NOT EXCEED 2:1 WITHOUT SPECIAL STABILIZATION AND APPROVAL FROM ENGINEER.
28. REFER TO UTILITY INFRASTRUCTURE PLAN SHEETS FOR UTILITY NOTES AND SPECIFICATIONS.
29. REVEGETATION SHALL BE COMPLETED PER LANDSCAPE PLANS.

PO Box 9550 | 1315 HWY 89 S, Ste. 201
Jackson, WY 83002
PH: 307.733.5150
www.jorgeng.com

Checked By: JL
Drawn By: SW

JORGENSEN

JACKSON, WY

BROWSE 'N BUY
DEVELOPMENT PLAN

ST JOHN'S EPISCOPAL CHURCH
CACHE STREET CAMPUS

Sheet Title:
OVERVIEW

Date: 25 May 2025

Revisions:

Drawing Number:
C1.0

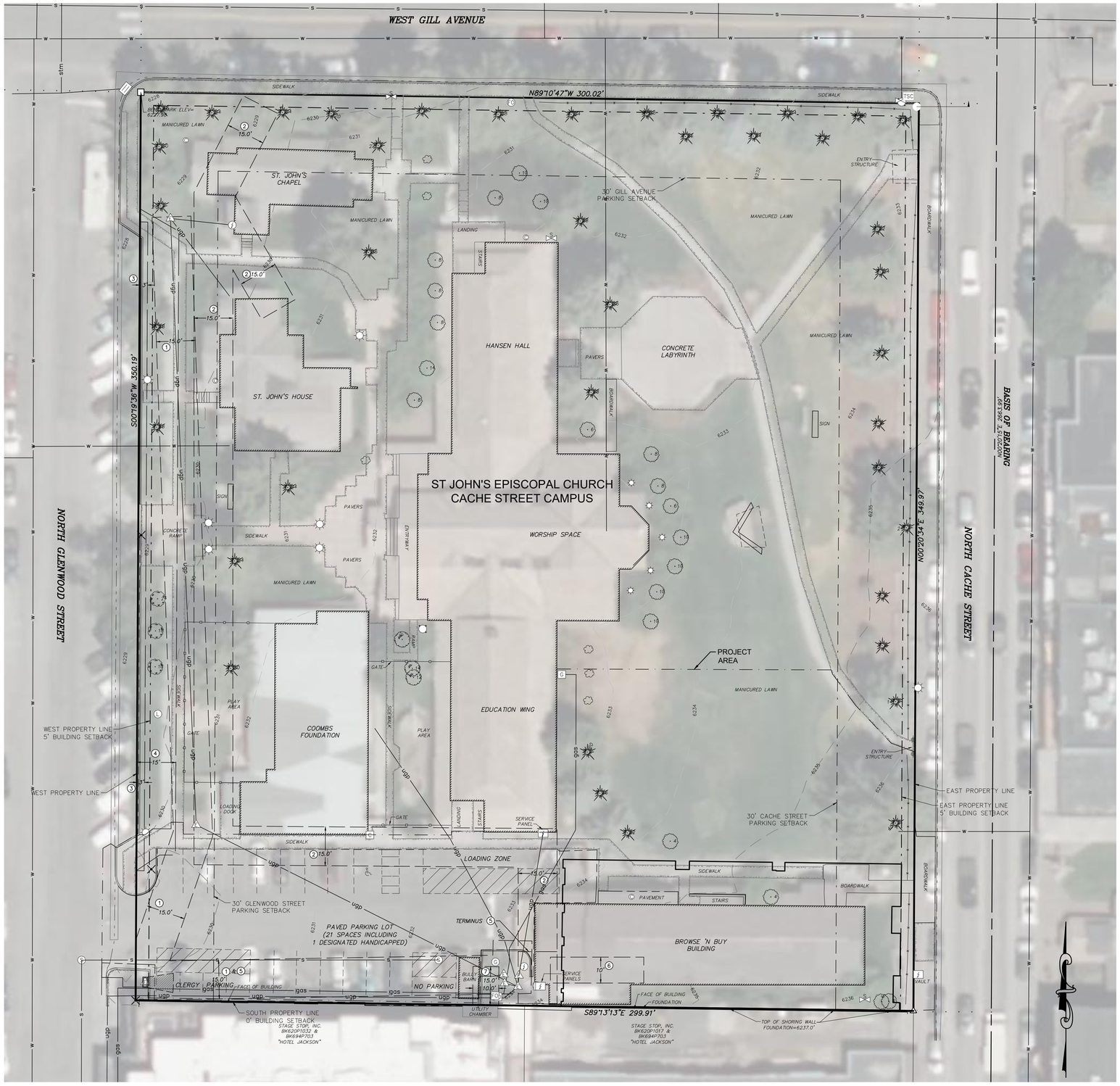

SCALE: 1 INCH = 20 FEET
THIS SCALE VALID ONLY FOR 24x36 PRINTS

LEGEND

- indicates a monument with Land Corner Recordation Certificate of record in the Office of the Clerk of Teton County, Wyoming
- aluminum pipe with 3" diameter aluminum cap inscribed "PETER M. JORGENSEN ENG PE & LS 2612"
- iron pipe with 3" diameter brass cap inscribed "PLS 3889" with other markings
- iron pipe with 3" diameter brass cap inscribed "PE & LS 578" with other markings
- PK nail
- reinforcing steel bar with 2" diameter aluminum cap inscribed "JORGENSEN ASSOCIATES P.C. PLS 13002"
- reinforcing steel bar with 2" diameter aluminum cap inscribed "PLS 16012"
- section line
- boundary, subject property
- boundary, adjoining property
- boundary, utility easement, as noted
- boundary, easement, as noted
- N25°25'25"E 100.00' — measured bearing & distance or curve geometry
- (N25°25'25"E) (100.00') — record bearing & distance or curve geometry, Plat 100
- edge of pavement
- curb
- flowline
- 6205 — index contour, 5' interval
- 6208 — intermediate contour, 1' interval
- 6201.5 — spot elevation
- bicycle rack
- bollard
- post, timber, support for entryway
- sign
- fence, buckrail
- fence, wood slat
- edge of concrete and sidewalk
- structure, exterior face
- monitoring well
- aspen tree, caliper X"
- cottonwood tree, caliper X"
- deciduous tree, caliper X"
- conifer tree, caliper X"
- shrub
- C — communications pedestal
- FO — fiber optic pedestal
- FO — fiber optic vault
- sprinkler control vault
- G — gas, underground marker, yellow carsonite post
- G — gas meter
- gas — underground gas line (Lower Valley Energy, Inc. GIS data)
- electric junction box, vault, or service panel
- electric meter
- electric transformer
- luminaire
- light pole
- ugp — underground power line (Lower Valley Energy, Inc. GIS data)
- cleanout
- L — lift station
- S — sewer manhole
- s — sanitary sewer line (Town of Jackson GIS data)
- storm drain inlet
- stm — storm drain line (Town of Jackson GIS data)
- hydrant, fire suppression
- water valve
- w — water line (Town of Jackson GIS data)
- TSC — traffic signal control box
- traffic signal mast arm and pole

SURVEY NOTES

This survey was conducted in September 2023 and prepared under the direction of Matthew P. Gotham, Wyoming PLS 13002, and does not include an engineering review.

Locations of utilities depicted hereon are limited to visible structures; underground locations are derived from Town of Jackson and Lower Valley Energy, Inc. GIS data and must be verified prior to any construction activity.

Easements depicted are based on a cursory review of instruments of record in the Office of the Clerk of Teton County, Wyoming. Other easements or encumbrances may exist on the subject property.

Elevations were derived using GPS RTK observation methods and reference NAVD88. Site benchmark elevation is 6227.98 at the northwest property corner.

Record dimensions indicated are from said Plat 100.

Bearings are based on the Wyoming West State Plane coordinate system NAD83 West Zone with distances scaled to ground by a factor of 1.0003176930.

BASIS OF BEARING for this survey is N00°20'15"E on the section line between the section corner common to Sections 27, 28, 33, & 34 and the quarter corner common to Sections 27 & 28, Township 41 North, Range 115 West, 6th P.M. as depicted hereon.

JORGENSEN
PO Box 9550 | 1315 HWY 89 S, Ste. 201
Jackson, WY 83002
PH: 307.733.5150
www.jorgeng.com

Drawn By: SW
Checked By: JL

JACKSON, WY

BROWSE 'N BUY
DEVELOPMENT PLAN

ST JOHN'S EPISCOPAL CHURCH
CACHE STREET CAMPUS

SHEET TITLE: EXISTING SITE

DATE: 25 MAY 2025

REVISIONS:

DRAWING NUMBER: C1.1

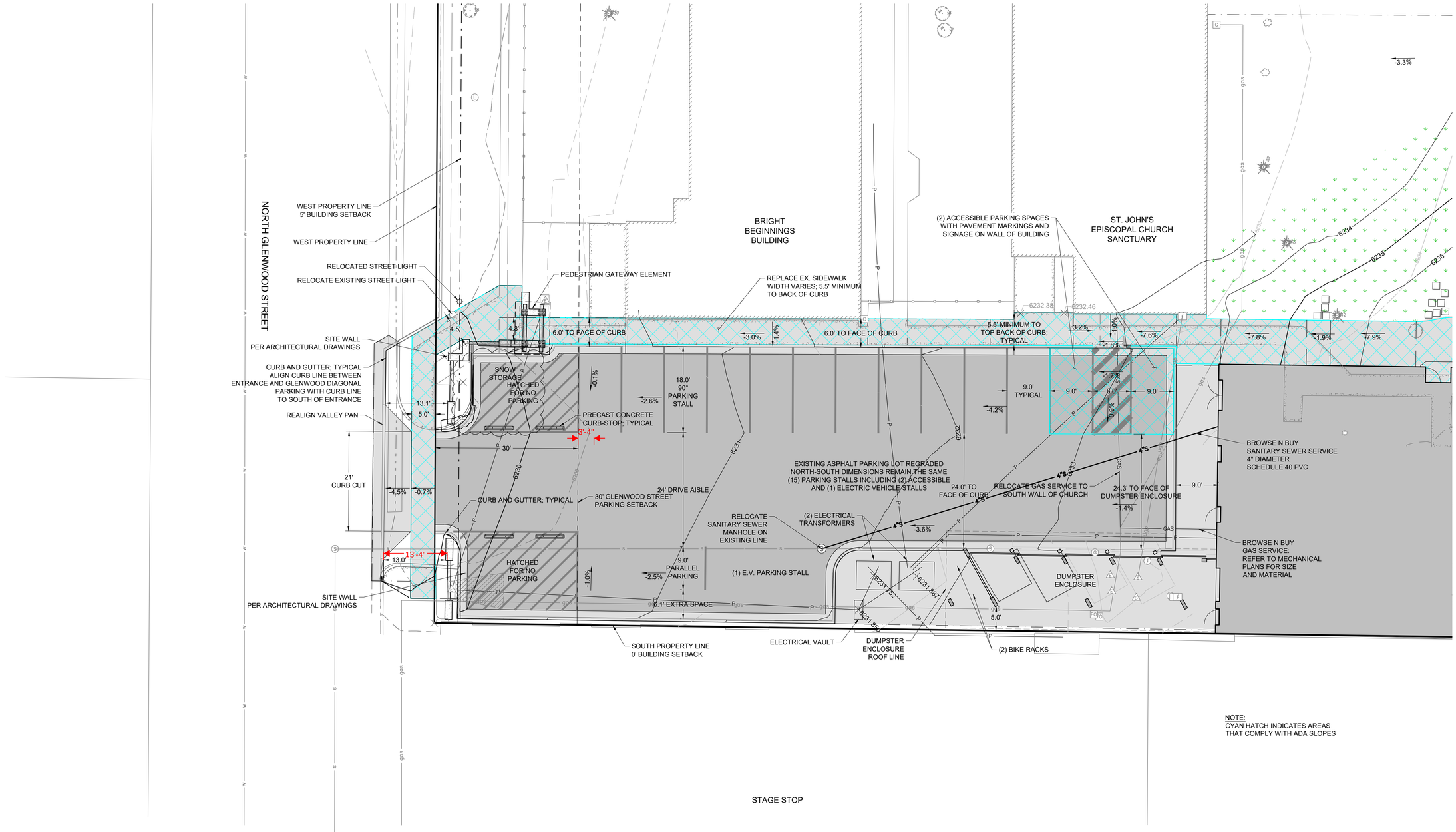

NOTE:
CYAN HATCH INDICATES AREAS
THAT COMPLY WITH ADA SLOPES

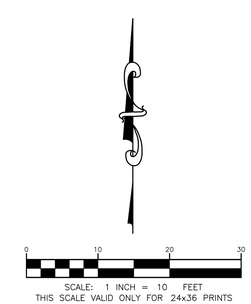

PO Box 9550 | 1315 HWY 89 S, Ste. 201
Jackson, WY 83002
PH: 307.733.5150
www.jorgeng.com
JORGENSEN

Checked By: JL
Drawn By: SW

JACKSON, WY

BROWSE 'N BUY
DEVELOPMENT PLAN

ST JOHN'S EPISCOPAL CHURCH
CACHE STREET CAMPUS

Sheet Title:
WEST SITE PLAN

Date: 25 May 2025

Revisions:

Drawing Number:
C2.0

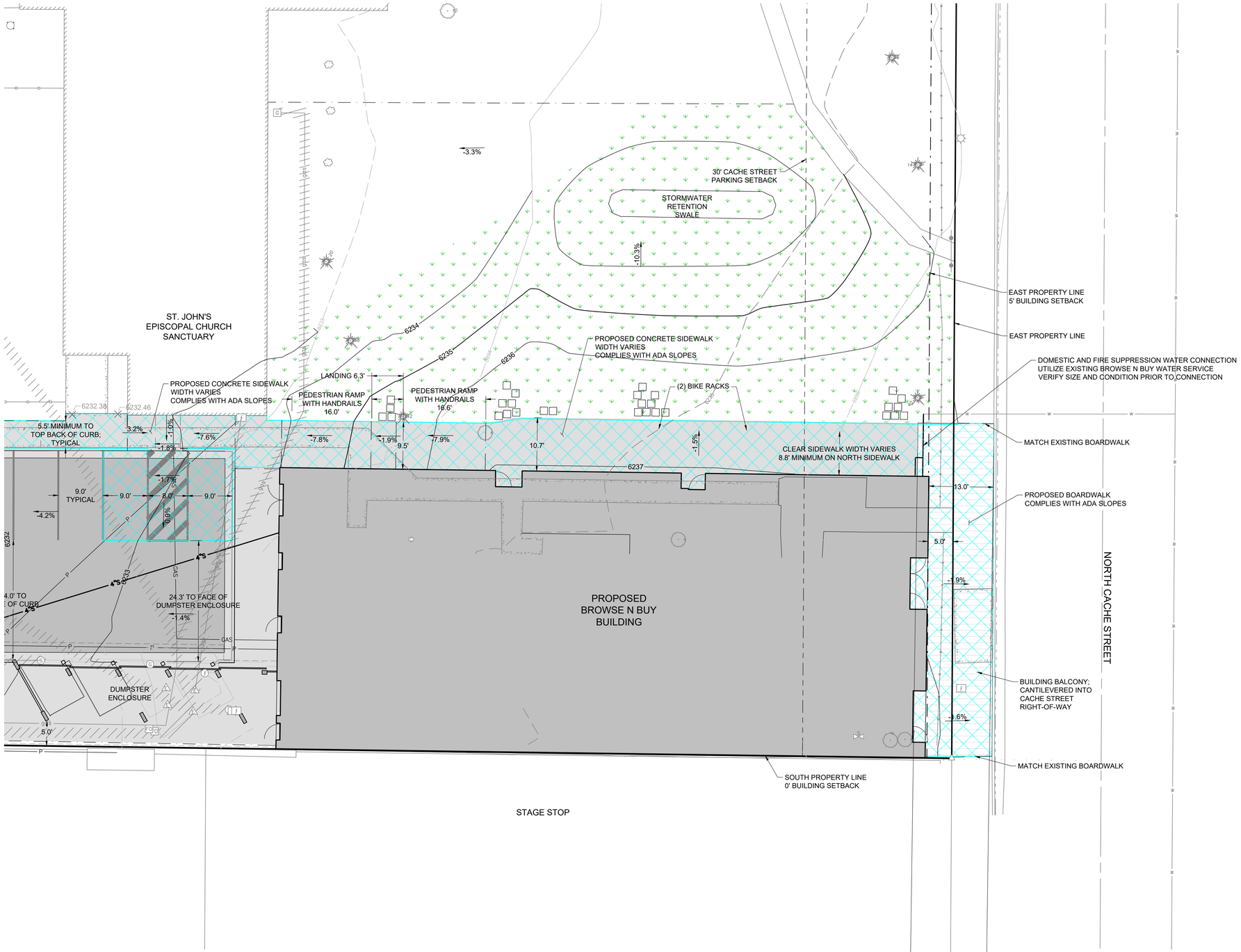

NOTE:
CYAN HATCH INDICATES AREAS
THAT COMPLY WITH ADA SLOPES

0 10 20 30
SCALE: 1 INCH = 10 FEET
THIS SCALE VALID ONLY FOR 24x36 PRINTS

PO Box 9550 | 1315 HWY 89 S, Ste. 201
Jackson, WY 83002
PH: 307.733.5150
www.jorgeng.com

JORGENSEN

Checked By: JL
Drawn By: SW

JACKSON, WY

BROWSE 'N BUY
DEVELOPMENT PLAN

ST JOHN'S EPISCOPAL CHURCH
CACHE STREET CAMPUS

Sheet Title:
EAST SITE PLAN

Date: 25 May 2025

Revisions:

Drawing Number:
C2.1

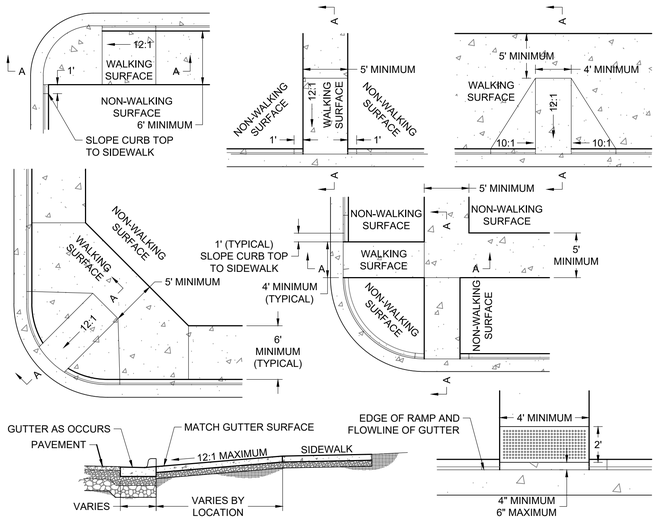

NOTE

1. SIDEWALKS SHALL CONFORM TO ALL APPLICABLE ADA STANDARD REQUIREMENTS.
2. LIP AT GUTTER TO BE NO MORE THAN ¼" HIGH
3. CONCRETE TO BE BROOM FINISH.
4. ALL PEDESTRIAN RAMPS SHALL INCLUDE PLACEMENT OF CAST IRON TRUNCATED DOME DETECTION PANELS IN A BRICK RED COLOR. (PANELS SHALL BE PROVIDED BY TOJ.)

PEDESTRIAN RAMP DETAIL

NOT TO SCALE — TOJ ST-112

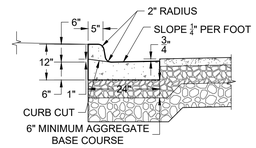

VERTICAL CURB

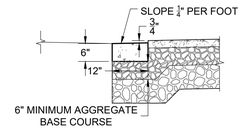

RIBBON CURB

NOTE

1. CURBS SHALL CONFORM TO WPWSS SECTION 02525, EXCEPT THAT PORTLAND CEMENT CONCRETE SHALL BE CLASS 4000 CONCRETE CONFORMING WITH WPWSS SECTION 03304, PART 2.07.
2. AGGREGATE BASE COURSE SHALL BE SIX INCH MINIMUM THICKNESS, CONFORM TO WPWSS SECTION 02190, PART 2.03, GRADING H, AND BE INSTALLED PER WPWSS SECTION 02231, PART 3.03.
3. REMOVAL AND REPLACEMENT OF CURB SHALL TAKE PLACE IN FULL PANELS.
4. ROLL CURB SHALL NOT BE ALLOWED.

CURB SECTION DETAIL

NOT TO SCALE — REVISED TOJ ST-110

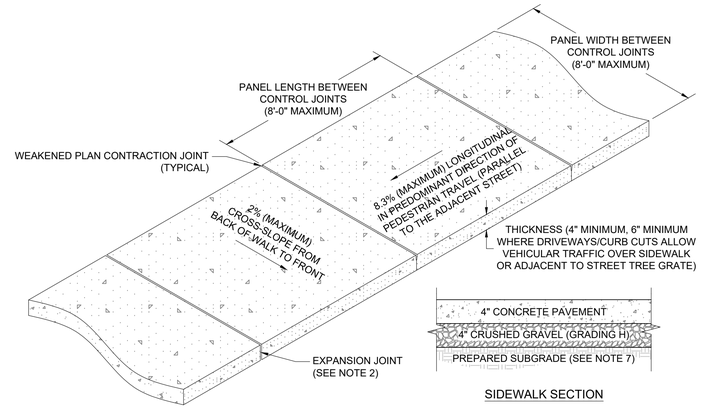

SIDEWALK SECTION

NOTE

1. SIDEWALK SHALL CONFORM TO ALL APPLICABLE ADA STANDARD REQUIREMENTS SIDEWALKS SHALL CONFORM TO WPWSS SECTION 02776, EXCEPT THAT PORTLAND CEMENT CONCRETE CLASS 4000 CONCRETE CONFORMING WITH WPWSS SECTION 03304, PART 2.07.
2. EXPANSION JOINTS SHALL BE PLACED IN SIDEWALK AT THE SAME LOCATIONS AS THOSE IN CURB AND GUTTER WHEN SIDEWALK IS ADJACENT TO CURB. (PER WPWSS SECTION 03251, PART 3.04 SPACING SHALL NOT EXCEED 32'-0" ON CENTER.)
3. FOR SIDEWALKS GREATER THAN EIGHT FEET IN WIDTH, A LONGITUDINAL CONTROL JOINT SHALL BE INSTALLED AT THE CENTER OF THE WALK.
4. REMOVAL AND REPLACEMENT OF SIDEWALK SHALL TAKE PLACE IN FULL PANELS.
5. AGGREGATE BASE COURSE SHALL BE FOUR INCH MINIMUM THICKNESS, CONFORM TO WPWSS SECTION 02190, PART 2.03 GRADING H, AND BE INSTALLED PER WPWSS SECTION 02231, PART 3.03.
6. CLEAR VEGETATION AND STRIP TOPSOIL TO SUBGRADE. SCARIFY, CONDITION, AND COMPACT. PROOF ROLL IN THE PRESENCE OF THE ENGINEER
7. MATERIAL STRIPPED TO DEPTH LOWER THAN SUBGRADE SHALL BE REPLACED WITH STRUCTURAL MATERIAL TO SUBGRADE ELEVATION.
8. WHERE UNSUITABLE SUBGRADE SOIL EXISTS, OVER EXCAVATION AND REPLACEMENT WILL BE REQUIRES. GEOGRID MAY BE SUBSTITUTED FOR OVER EXCAVATION UPON APPROVAL FROM GEOTECHNICAL ENGINEER.

TYPICAL CONCRETE SIDEWALK DETAIL

NOT TO SCALE — REVISED TOJ ST-127

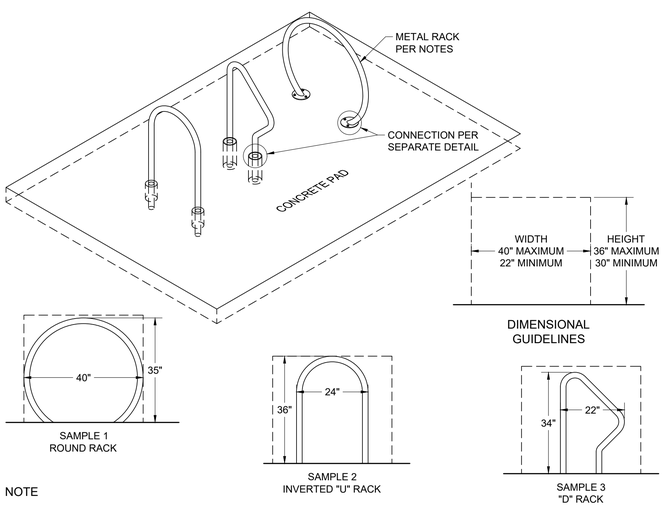

NOTE

1. ALL BIKE RACKS MUST COMPLY WITH THE FOLLOWING STANDARDS. ADDITIONAL STYLES NOT LISTED IN THIS DETAIL MAY BE APPROVED BY THE PATHWAYS COORDINATOR.
   1.1. ALL RACKS SHALL BE SECURELY ANCHORED TO A PERMANENT FOUNDATION
   1.2. RACKS SHALL BE METAL TUBE WITH A MINIMUM DIAMETER OF 1.5"
   1.3. ALLOWABLE FINISHES ARE GALVANIZED, STAINLESS STEEL AND THERMOPLASTIC OR VINYL PAINT
   1.4. RACKS MUST PROVIDE SUPPORT TO BIKE FRAME IN TWO PLACES
   1.5. RACK MUST PROVIDE SPACE TO SECURE THE FRAME AND ONE OR BOTH WHEELS TO THE RACK WITH A CABLE, CHAIN OR U-LOCK
2. RACKS THAT REQUIRE WHEELS TO BE LIFTED OFF THE GROUND ARE NOT ALLOWED

BIKE RACK STYLES DETAIL

NOT TO SCALE

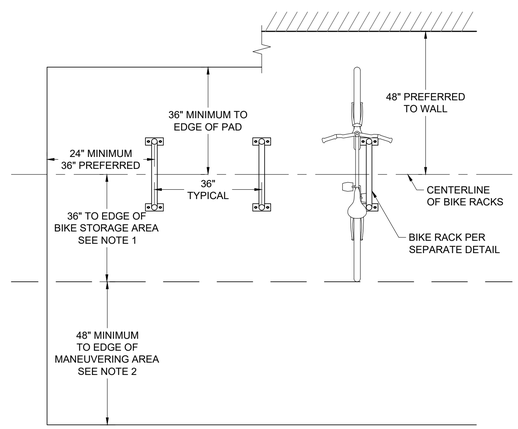

NOTE

1. FOR OVERSIZED BIKES THIS DIMENSION SHALL BE INCREASED TO 72".
2. THE MANEUVERING AREA MAY BE ANY TRAVERSABLE SURFACE INCLUDING SIDEWALK, PATHWAYS OR OTHER HARDSCAPE, AND PORTIONS OF PARKING NOT ALLOCATED TO PARKING STALLS. THIS AREA MAY NOT INCLUDE VERTICAL OBSTRUCTIONS OR TRAFFIC STREETS.

BIKE RACK SPACING DETAIL

NOT TO SCALE

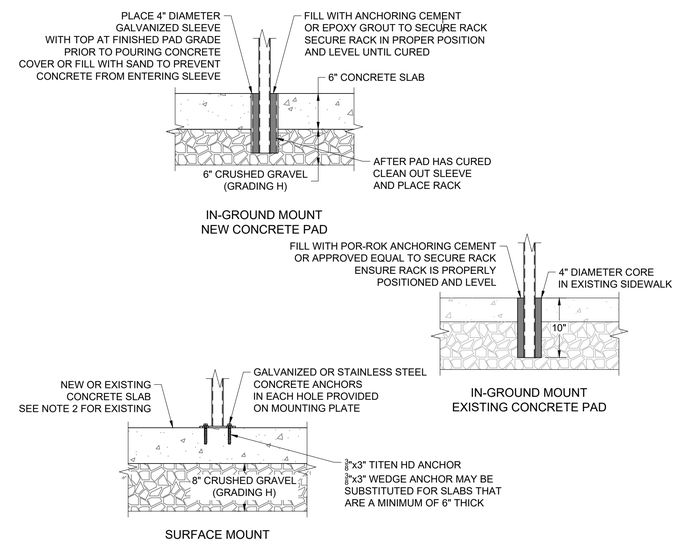

NOTE

1. SURFACE MOUNTED RACKS MAY BE PLACED ON EXISTING CONCRETE SLABS PROVIDED THEY DO NOT HAVE EXCESSIVE CRACKING AND HAVE A MINIMUM THICKNESS OF 4".
2. MULTIPLE RACKS MAY BE MOUNTED ON RAILS PROVIDED THE RAIL IS SECURELY ANCHORED TO A PERMANENT FOUNDATION

BIKE RACK MOUNTING DETAIL

NOT TO SCALE

PO Box 9550 | 1315 HWY 89 S, Ste. 201
Jackson, WY 83002
PH: 307.733.5150
www.jorgeng.com
JORGENSEN
Drawn By: SW
Checked By: JL

BROWSE 'N BUY
DEVELOPMENT PLAN
ST JOHN'S EPISCOPAL CHURCH
CACHE STREET CAMPUS
JACKSON, WY

Sheet Title: GRADING DETAILS
Date: 25 May 2025
Revisions:
Drawing Number: C3.0

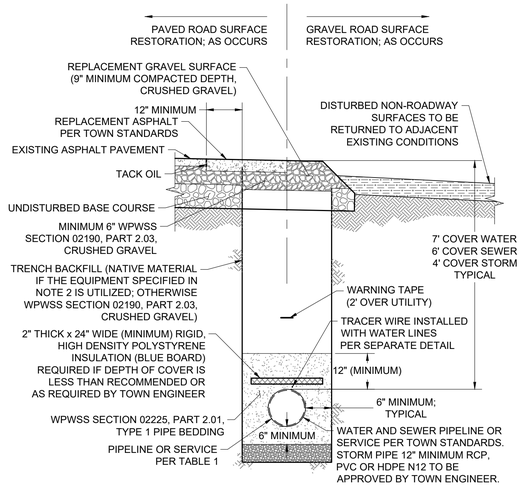

NOTE

1. TRENCH BACKFILL BELOW THE SURFACE SHALL MEET THE FOLLOWING CRITERIA:
   - 95% MODIFIED PROCTOR DENSITY WITHIN STREET AND ALLEY RIGHTS-OF-WAY.
   - 90% MODIFIED PROCTOR DENSITY OUTSIDE STREET AND ALLEY RIGHTS-OF-WAY.
2. COMPACTION OF NATIVE TRENCH BACKFILL, WITH ALL ROCK LARGER THAN 6" REMOVED, SHALL BE CARRIED OUT IN 2" LIFTS WITH A HOE-PACK OR A VIBRATORY SHEEPS FOOT ROLLER (COMPACTION METHOD AND EQUIPMENT SHALL BE REVIEWED AND APPROVED BY TOWN ENGINEER PRIOR TO BACKFILLING).
3. UNLESS OTHERWISE DIRECTED, ALL BASE COURSE AND GRAVEL SURFACE REPLACEMENT SHALL BE INSTALLED PER WPWSS SECTION 02231, PART 3.03.
4. ALL TRENCH EXCAVATION SHALL CONFORM TO WYOMING OCCUPATIONAL HEALTH AND SAFETY ADMINISTRATION (WYOSHA) REGULATIONS.
5. PROVIDE INSULATION WHERE COVER OVER WATER LINES AND FORCE MAINS ARE LESS THAN 7 FEET AND WHERE SANITARY SEWER AND STORM LINES ARE LESS THAN 5 FEET.

PIPE TRENCH DETAIL

NOT TO SCALE — W-100, SS-100, STM-100

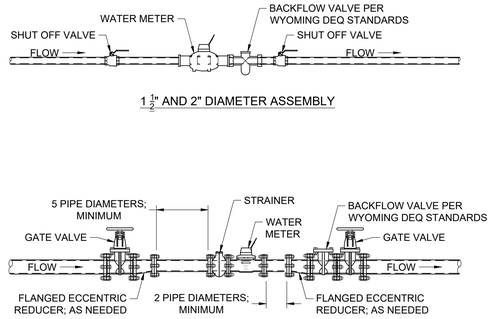

NOTE

1. SERVICE PIPE MATERIAL SHALL MEET ADOPTED PLUMBING CODE REQUIREMENTS.
2. METER SHALL BE INSTALLED IN HORIZONTAL ALIGNMENT ONLY.
3. CONNECTIONS WITHIN THE ASSEMBLY SHALL BE THREADED OR BOLTED FLANGED, AS APPROPRIATE.
4. METER SHALL BE PURCHASED FROM AND SUPPLIED BY THE TOWN OF JACKSON

WATER METER (1½" & LARGER DIAMETER) DETAIL

NOT TO SCALE — W-113

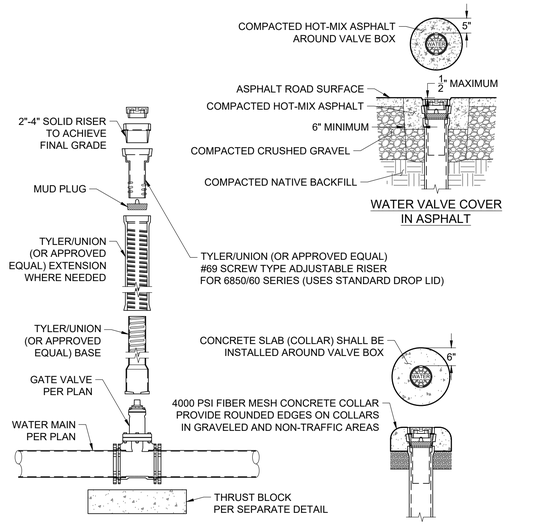

NOTE

1. ADJUST WATER VALVE BOX UPWARD OR DOWNWARD AS REQUIRED. FINAL ADJUSTMENT SHALL BE MADE AFTER PAVING AND BEFORE SEAL COATING
2. THE TOWN SHALL INSPECT THE VERTICAL ALIGNMENT BEFORE AND AFTER BACKFILLING
3. MUD PLUGS ARE REQUIRED TO BE PLACED IN ALL VALVE BOXES

WATER VALVE & COLLAR ASSEMBLY DETAIL

NOT TO SCALE — W-106

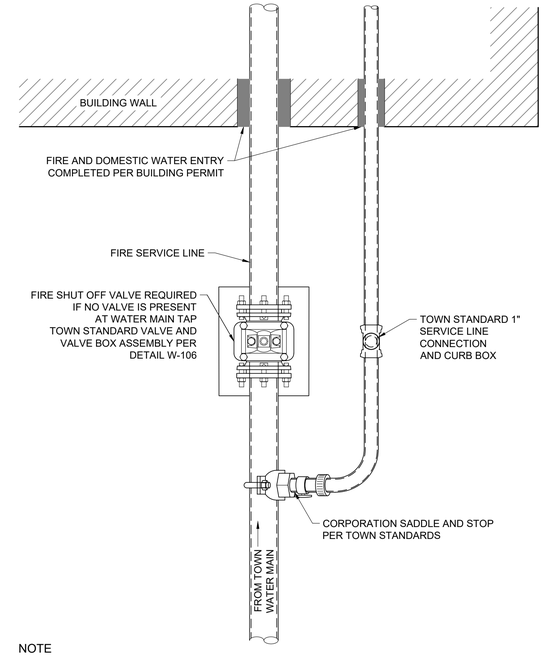

NOTE

1. FIRE SERVICE LINE ENTRY INTO BUILDING OR STRUCTURE SHALL BE SUBJECT TO REGULATIONS OF AND REVIEW BY THE TOWN OF JACKSON BUILDING DEPARTMENT AND FIRE MARSHALL.

FIRE LINE WITH WATER SERVICE DETAIL

NOT TO SCALE — W-110

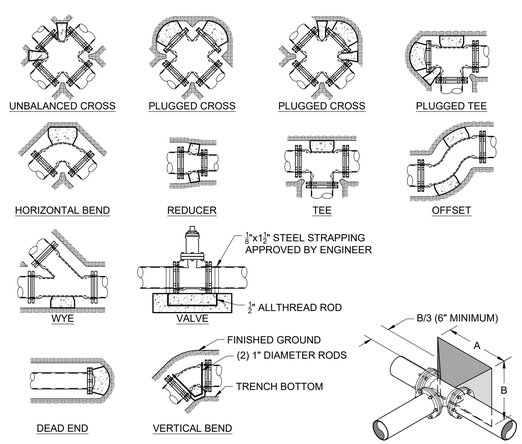

MINIMUM DIMENSIONS FOR THRUST BLOCKING NOTES										
FITTING	TEES AND PLUGS		90° BENDS		45° BENDS AND WYES		REDUCERS AND 22 1/2° BENDS		11 1/2° BENDS	
SIZE	A	B	A	B	A	B	A	B	A	B
4"	1'-7"	1'-2"	1'-9"	1'-6"	1'-8"	0'-10"	1'-7"	0'-6"	0'-6"	0'-6"
6"	2'-0"	1'-11"	2'-5"	2'-2"	1'-10"	1'-7"	1'-9"	0'-10"	1'-0"	0'-6"
8"	2'-8"	2'-6"	3'-2"	3'-0"	2'-5"	2'-1"	1'-9"	1'-6"	1'-0"	1'-0"
10"	3'-4"	3'-3"	4'-0"	3'-10"	3'-0"	2'-9"	2'-2"	1'-11"	1'-6"	1'-0"
12"	4'-0"	3'-10"	4'-8"	4'-8"	3'-8"	3'-3"	2'-7"	2'-3"	2'-0"	1'-0"
14"	5'-5"	3'-10"	6'-6"	4'-11"	4'-9"	3'-5"	3'-5"	2'-5"	2'-0"	1'-6"
20"	5'-0"	5'-0"	6'-0"	6'-0"	5'-0"	4'-0"	3'-6"	3'-0"	3'-0"	2'-0"
24"	6'-0"	6'-0"	7'-0"	7'-0"	5'-0"	5'-0"	4'-6"	3'-0"	3'-0"	3'-0"
30"	7'-6"	7'-6"	8'-0"	8'-0"	6'-3"	6'-3"	4'-9"	4'-6"	3'-3"	3'-3"

NOTE

1. SIZE BLOCKS SHALL BE A MINIMUM OF 6" THICK
2. ALL BLOCKING SHALL BEAR AGAINST UNDISTRIBUTED MATERIAL
3. DESIGN IS BASED ON 150 PSI MAIN PRESSURE AND 2000 PSF SOIL BEARING CAPACITY.
4. 4 MIL POLYETHELENE PLASTIC BOND BREAKER SHALL BE PROVIDED BETWEEN THRUST BLOCK AND WATER PIPE

THRUST BLOCK DETAIL

NOT TO SCALE — W-111

PO Box 9550 | 1315 HWY 89 S., Ste. 201
Jackson, WY 83002
PH: 307.733.5150
www.jorgeng.com
JORGENSEN
Checked By: JL
Drawn By: SW

JACKSON, WY

BROWSE 'N BUY
DEVELOPMENT PLAN

ST JOHN'S EPISCOPAL CHURCH
CACHE STREET CAMPUS

Sheet Title: WATER DETAILS

Date: 25 May 2025

Revisions:

Drawing Number: C3.1

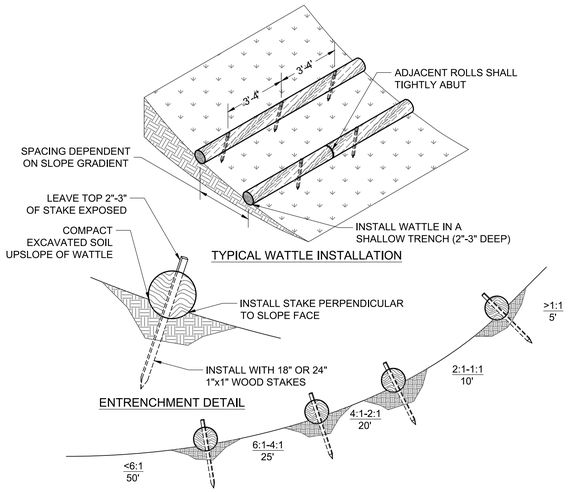

NOTE

1. BEGIN AT THE LOCATION WHERE THE WATTLE IS TO BE INSTALLED BY EXCAVATING A 2"-3" DEEP BY 9" WIDE TRENCH ALONG THE CONTOUR OF THE SLOPE. EXCAVATED SOIL SHALL BE PLACED UP-SLOPE FROM THE ANCHOR TRENCH.
2. PLACE THE WATTLE IN THE TRENCH SO THAT IT CONTOURS TO THE SOIL SURFACE. COMPACT SOIL FROM THE EXCAVATED TRENCH AGAINST THE WATTLE ON THE UPHILL SIDE. ADJACENT WATTLES SHOULD TIGHTLY ABUT.
3. SECURE THE WATTLE WITH 18"-24" STAKES EVERY 3'-4' AND WITH A STAKE ON EACH END. STAKES SHALL BE DRIVEN THROUGH THE MIDDLE OF THE WATTLE LEAVING AT LEAST 2"-3" OF STAKE EXTENDING ABOVE THE WATTLE. STAKES SHALL BE DRIVEN PERPENDICULAR TO THE SLOPE FACE.
4. EROSION CONTROL PLAN AND LOCATION OF STRAW WATTLES SHALL BE APPROVED BY THE TOWN OF JACKSON PUBLIC WORKS DEPARTMENT.

X / CX.X — TYPICAL STRAW WATTLE DETAIL
NOT TO SCALE — TOJ STM-107

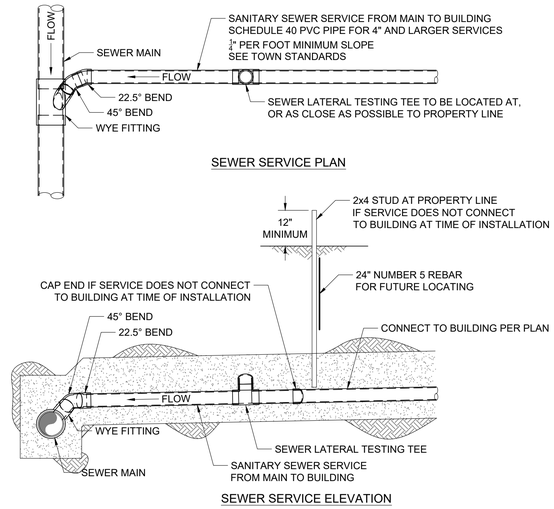

NOTE

1. NEW SERVICE CONNECTIONS TO EXISTING SANITARY SEWER MAINS SHALL BE COORDINATED WITH TOWN OF JACKSON PUBLIC WORKS.
2. BACKFILL OPERATIONS AT NEW SERVICES CONNECTED TO EXISTING SANITARY SEWER MAINS SHALL BE COMPACTED PER TOWN STANDARDS
3. CLEANOUTS TO BE PROVIDED ADJACENT TO BUILDING, EVERY 100' ALONG THE SERVICE LINE AND AT ALL BENDS.
4. PRIVATE PARTY BEING SERVED BY CONNECTION RESPONSIBLE FOR FEE TAP AND APPROVAL BY UTILITY OWNER.

X / CX.X — SANITARY SEWER SERVICE DETAIL
NOT TO SCALE — TOJ SS-111

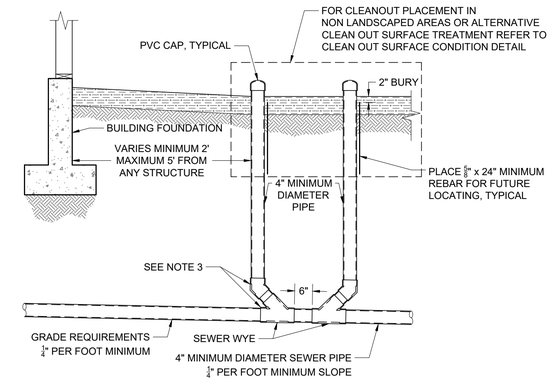

NOTE

1. PRIOR TO BACKFILLING THE TOWN PUBLIC WORKS DEPARTMENT MUST INSPECT ALL PIPE, FITTINGS, COUPLINGS, GRADE AND COMPLETE LEAK TESTING.
2. INSTALL AND COMPACT ALL BACKFILL MATERIAL PER TOWN PUBLIC WORKS DEPARTMENT STANDARD SPECIFICATIONS AND AS SHOWN WITHIN THE TRENCH DETAIL.
3. ALL PVC FITTINGS SHALL MEET ASTM D3034 SPECIFICATIONS, AND SHALL ALSO MEET ASTM D312 SPECIFICATIONS FOR RUBBER GASKETED BELL AND SPIGOT TYPE WITH INTEGRAL BELL.

BUILDING CLEANOUT DETAIL
NOT TO SCALE — REV TOJ SS-114

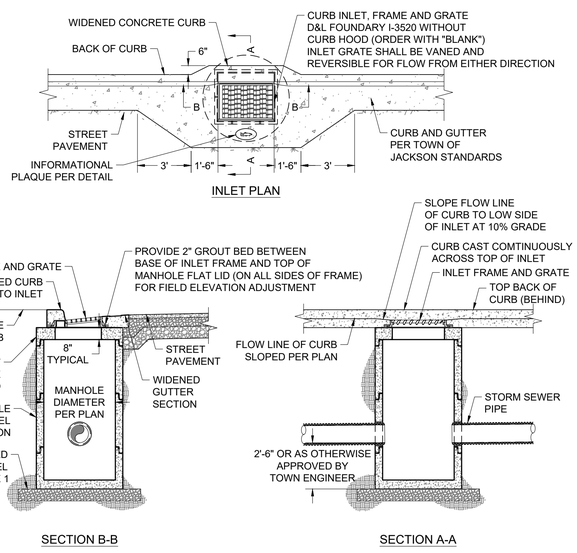

NOTE

1. GRAVEL SHALL BE EIGHT INCH MINIMUM THICKNESS, CONFORM TO WPWSS SECTION 02190, PART 2.03, GRADING H, AND BE INSTALLED PER WPWSS SECTION 02231, PART 3.03.

X / CX.X — CURB INLET WITHOUT HOOD DETAIL
NOT TO SCALE — REVISED TOJ STM-101

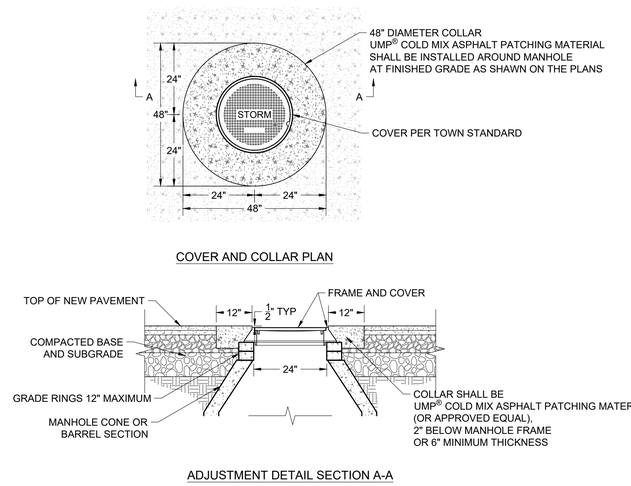

NOTE

1. ADJUST MANHOLE UPWARD WITH ADJUSTING RINGS UNDER FRAME. ADJUST MANHOLE DOWNWARD BY REMOVING A PORTION OF THE MANHOLE RISER AND REBUILDING TO PROPER HEIGHT. SLOPE MANHOLE RING AS REQUIRED TO MATCH STREET GRADE AND CROSS SLOPE. MAKE FINAL MANHOLE ADJUSTMENT AFTER PAVING AND BEFORE SEAL COATING.
2. IF SEWER MANHOLE IS WITHIN UNPAVED AREA USE TAPERED COLLAR. SEE TOWN SANITARY SEWER DETAIL SS-110.

MANHOLE ADJUSTMENT & COLLAR IN ASPHALT
NOT TO SCALE — TOJ STM-103

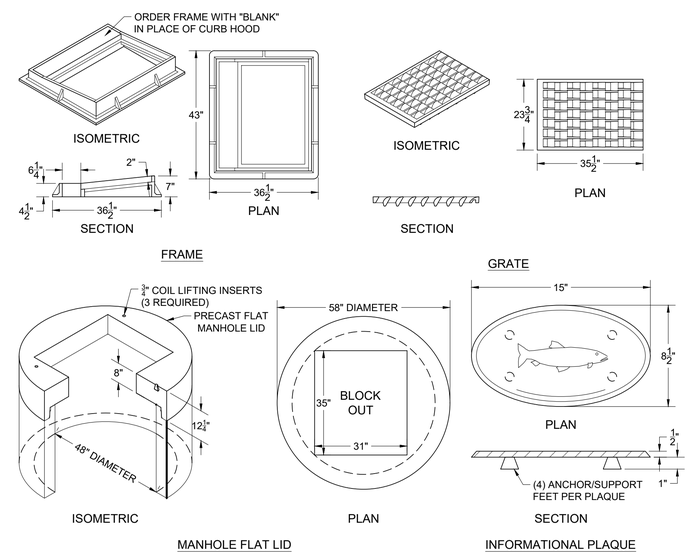

NOTE

1. INLET GRATE AND FRAME SHALL BE MODEL NUMBER I-3520 AS MANUFACTURED BY D&L SUPPLY OF LINDON UTAH, OR APPROVED EQUAL.
2. INLET GRATE SHALL BE VANED AND REVERSIBLE FOR EITHER LEFT-TO-RIGHT OR RIGHT-TO-LEFT FLOW.
3. PLAQUE SHALL BE SUBSTANTIALLY AS SHOWN, AS SUPPLIED BY D&L SUPPLY OF LINDON, UTAH, OR APPROVED EQUAL.

X / CX.X — INLET FRAME, GRATE, LID AND PLAQUE DETAILS
NOT TO SCALE — REVISED TOJ STM-105

PO Box 9550 | 1315 HWY 89 S, Ste. 201
Jackson, WY 83002
PH: 307.733.5150
www.jorgeng.com
JORGENSEN
Drawn By: SW
Checked By: JL

JACKSON, WY

BROWSE 'N BUY
DEVELOPMENT PLAN

ST JOHN'S EPISCOPAL CHURCH
CACHE STREET CAMPUS

Sheet Title: STORM DETAILS

Date: 25 May 2025

Revisions:

Drawing Number: C3.2

JORGENSEN
PO Box 9550 | 1315 HWY 89 S., Ste. 201
Jackson, WY 83002
PH: 307.733.5150
www.jorgeng.com

WATER SYSTEM DEMAND PER WYDEQ CHAPTER 11

Project Name: **St. John's Episcopal Church - Browse' n Buy**
Jorgensen Project Number: **JA Project No. 23092**
Site Calculation Date: **19 Feburary 2025**

Average Daily Flow; percent of maximum	60%
Peak Hour Factor	2

SANITARY SEWER DEMAND					
Unit Type	Number of Units	Max Flow per Unit, (gpd)[1]	Average TOTAL, (gpd)	Maximum TOTAL, (gpd)	PEAK HOUR, (gpm)
Mercantile	106	15	954	1,590	2.2
Storage & Sorting	18	15	162	270	0.4
Recovery Community	114	15	1,026	1,710	2.4
Jackson Food Cupboard	25	15	225	375	0.5
Residential Apartments	2	120	144	240	0.3
TOTAL SANITARY SEWER DEMAND			2,511	4,185	5.8

Notes:

[1] *Based on daily flow rates from the WYDEQ CH 25, Section 5, Table 2*

[2] *Number of occuplants or bedrooms based on Design Development Plan, 1.15.2025*

JORGENSEN
It's About People, Trust and Know How

Project: Browse'n Buy | Project No: 23092.10
Calculated By: JL/TK | Date: 19 Feburary 2025
Sheet: Stormwater Calculation | Basin Summary

Pre Development Site

Surface Type	Area A (ft^2)
Basin A - Parking Lot, Direct Runoff	
Lawn, Sandy, Flat, 2%	640
Asphalt and Concrete	10,108
Roofs	1,079
Unimproved	
Unimproved	
Total	**11,827**
Basin B - Building & Landscaped Area, Infiltration	
Lawn, Sandy, Flat, 2%	3,398
Asphalt and Concrete	835
Roofs	4,235
Unimproved	
Unimproved	
Total	**8,468**

Post Development Site

Surface Type	(ft^2)
Basin A - Parking Lot, Direct Runoff	
Lawn, Sandy, Flat, 2%	183
Asphalt and Concrete	9,225
Roofs	1,753
Unimproved	
Unimproved	
Total	**11,161**
Basin B - Building & Landscaped Area, Infiltration	
Lawn, Sandy, Flat, 2%	0
Asphalt and Concrete	0
Roofs	9,089
Unimproved	
Unimproved	
Total	**9,089**

JORGENSEN
It's About People, Trust and Know How

Project: Browse' n Buy — Project No: 23092.10
Calculated By: JL/TK — Date: 19 Feburary 2025
Sheet: Stormwater Calculation — Basin A - Pre Development

Design Storm Frequency =	100	years

Discharge Rate, d =	0.00	cfs

Surface Type	Area A (ft^2)	Area (acres)	Runoff Coefficient C	Frequency Factor C_f	C x C_f	Calculation Value C'	C' x A (acres)
Lawn, Sandy, Flat, 2%	640	0.01	0.08	1.25	0.10	0.10	0.00
Asphalt and Concrete	10,108	0.23	0.95	1.25	1.19	1.00	0.23
Roofs	1,079	0.02	0.95	1.25	1.19	1.00	0.02
Unimproved	0	0.00	0.20	1.25	0.25	0.25	0.00
Unimproved	0	0.00	0.20	1.25	0.25	0.25	0.00
Totals	**11,827**	**0.27**					**0.27**

Weighted Runoff Coefficient, C_{wd} = $\frac{SC_jA_j}{SA_j}$ = 0.90

C_{wd} x C_f = 1.00

C_{wd} x C_f x SA_j = 0.27

Time of Concentration = 5.0 minutes

	Water Quantity Calculations		
Rainfall Duration, t (min)	**Rainfall Intensity, i (in/hr)**	**Runoff Volume (ft^3)**	**Peak Flow (ft^3/sec)**
0	0.00	0.00	0.00
5	3.00	246.40	0.81
10	2.33	382.73	0.63
15	1.90	468.15	0.52
20	1.65	542.07	0.45
30	1.30	640.63	0.35
40	1.08	709.62	0.29
50	0.95	780.25	0.26
60	0.82	808.18	0.22
70	0.74	850.89	0.20
80	0.65	854.17	0.18
90	0.61	901.81	0.17
100	0.56	919.88	0.15

Peak Flow Rate = 0.81 cfs

JORGENSEN
It's About People, Trust and Know How

Project: Browse' n Buy — Project No: 23092.10
Calculated By: JL/TK — Date: 19 Feburary 2025
Sheet: Stormwater Calculation — Basin B - Pre Development

Design Storm Frequency =	100	years

Discharge Rate, d =	0.00	cfs

Surface Type	Area A (ft^2)	Area (acres)	Runoff Coefficient C	Frequency Factor C_f	$C \times C_f$	Calculation Value C'	C' x A (acres)
Lawn, Sandy, Flat, 2%	3,398	0.08	0.08	1.25	0.10	0.10	0.01
Asphalt and Concrete	835	0.02	0.95	1.25	1.19	1.00	0.02
Roofs	4,235	0.10	0.95	1.25	1.19	1.00	0.10
Unimproved	0	0.00	0.20	1.25	0.25	0.25	0.00
Unimproved	0	0.00	0.20	1.25	0.25	0.25	0.00
Totals	**8,468**	**0.19**					**0.15**

Weighted Runoff Coefficient, $C_{wd} = \frac{SC_jA_j}{SA_j}$ = 0.60

$C_{wd} \times C_f$ = 0.75

$C_{wd} \times C_f \times SA_j$ = 0.15

Time of Concentration = 5.0 minutes

	Water Quantity Calculations		
Rainfall Duration, t (min)	**Rainfall Intensity, i (in/hr)**	**Runoff Volume (ft^3)**	**Peak Flow (ft^3/sec)**
0	0.00	0.00	0.00
5	3.00	132.51	0.44
10	2.33	205.83	0.34
15	1.90	251.77	0.28
20	1.65	291.52	0.24
30	1.30	344.52	0.19
40	1.08	381.63	0.16
50	0.95	419.61	0.14
60	0.82	434.63	0.12
70	0.74	457.60	0.11
80	0.65	459.36	0.09
90	0.61	484.98	0.09
100	0.56	494.70	0.08

Peak Flow Rate = 0.44 cfs

JORGENSEN
It's About People, Trust and Know How

Project: Browse' n Buy — Project No.: 23092.10
Calculated By: JL/TK — Date: 19 Feburary 2025
Sheet: Stormwater Calculation — Basin A - Post Development

Design Storm Frequency =	100	years

Discharge Rate, d =	0.81	cfs
◉ From	100	year pre-development storm
○ Other (enter flowrate)		cfs

Surface Type	Area A (ft^2)	Area (acres)	Runoff Coefficient C	Frequency Factor C_f	C x C_f	Calculation Value C'	C' x A (acres)
Lawn, Sandy, Flat, 2%	183	0.00	0.08	1.25	0.10	0.10	0.00
Asphalt and Concrete	9,225	0.21	0.95	1.25	1.19	1.00	0.21
Roofs	1,753	0.04	0.95	1.25	1.19	1.00	0.04
Unimproved	0	0.00	0.20	1.25	0.25	0.25	0.00
Unimproved	0	0.00	0.20	1.25	0.25	0.25	0.00
Totals	**11,161**	**0.26**					**0.26**

Weighted Runoff Coefficient, $C_{wd} = \frac{\Sigma C_j A_j}{\Sigma A_j} = 0.94$

$C_{wd} \times C_f = 1.00$

$C_{wd} \times C_f \times \Sigma A_j = 0.26$

Time of Concentration = 5.0 minutes

	Water Quantity Calculations				
Rainfall Duration, t (min)	**Rainfall Intensity, i (in/hr)**	**Runoff Volume (ft^3)**	**Discharge Volume (ft^3)**	**Req'd Site Detention (ft^3)**	**Peak Flow (ft^3/sec)**
0	0.00	0.00	0.00	0.00	0.00
5	3.00	230.60	244.36	0.82	0.77
10	2.33	358.20	488.72	-41.48	0.60
15	1.90	438.14	733.08	-130.45	0.49
20	1.65	507.32	977.44	-243.68	0.42
30	1.30	599.56	1466.16	-513.40	0.33
40	1.08	664.13	1954.88	-815.83	0.28
50	0.95	730.23	2443.60	-1140.02	0.24
60	0.82	756.37	2932.31	-1472.96	0.21
70	0.74	796.34	3421.03	-1819.30	0.19
80	0.65	799.41	3909.75	-2159.59	0.17
90	0.61	843.99	4398.47	-2525.36	0.16
100	0.56	860.90	4887.19	-2883.46	0.14

Peak Flow Rate = 0.77 cfs

Water Storage Required = * 1 **ft^3** 6 **gal**

*Req'd site detention greatly overestimates required storage when tc>t

JORGENSEN
It's About People, Trust and Know How

Project: Browse' n Buy — Project No: 23092.10
Calculated By: JL/TK — Date: 19 Feburary 2025
Sheet: Stormwater Calculation — Basin B - Post Development

Design Storm Frequency =	100	years

Discharge Rate, d =	0.00	cfs
○ From		year pre-development storm
◉ Other (enter flowrate)	0.00	cfs

Surface Type	Area A (ft^2)	Area (acres)	Runoff Coefficient C	Frequency Factor C_f	C x C_f	Calculation Value C'	C' x A (acres)
Lawn, Sandy, Flat, 2%	0	0.00	0.08	1.25	0.10	0.10	0.00
Asphalt and Concrete	0	0.00	0.95	1.25	1.19	1.00	0.00
Roofs	9,089	0.21	0.95	1.25	1.19	1.00	0.21
Unimproved	0	0.00	0.20	1.25	0.25	0.25	0.00
Unimproved	0	0.00	0.20	1.25	0.25	0.25	0.00
Totals	**9,089**	**0.21**					**0.21**

Weighted Runoff Coefficient, $C_{wd} = \frac{\Sigma C_j A_j}{\Sigma A_j} = 0.95$

$C_{wd} \times C_f = 1.00$

$C_{wd} \times C_f \times \Sigma A_j = 0.21$

Time of Concentration = 5.0 minutes

	Water Quantity Calculations				
Rainfall Duration, t (min)	**Rainfall Intensity, i (in/hr)**	**Runoff Volume (ft^3)**	**Discharge Volume (ft^3)**	**Req'd Site Detention (ft^3)**	**Peak Flow (ft^3/sec)**
0	0.00	0.00	0.00	0.00	0.00
5	3.00	187.79	0.00	187.79	0.63
10	2.33	291.70	0.00	291.70	0.49
15	1.90	356.80	0.00	356.80	0.40
20	1.65	413.14	0.00	413.14	0.34
30	1.30	488.25	0.00	488.25	0.27
40	1.08	540.83	0.00	540.83	0.23
50	0.95	594.67	0.00	594.67	0.20
60	0.82	615.95	0.00	615.95	0.17
70	0.74	648.50	0.00	648.50	0.15
80	0.65	651.00	0.00	651.00	0.14
90	0.61	687.31	0.00	687.31	0.13
100	0.56	701.08	0.00	701.08	0.12
				*	

Peak Flow Rate = 0.63 cfs

Water Storage Required = 701 **ft^3**
5244 **gal**

*Req'd site detention greatly overestimates required storage when tc>t

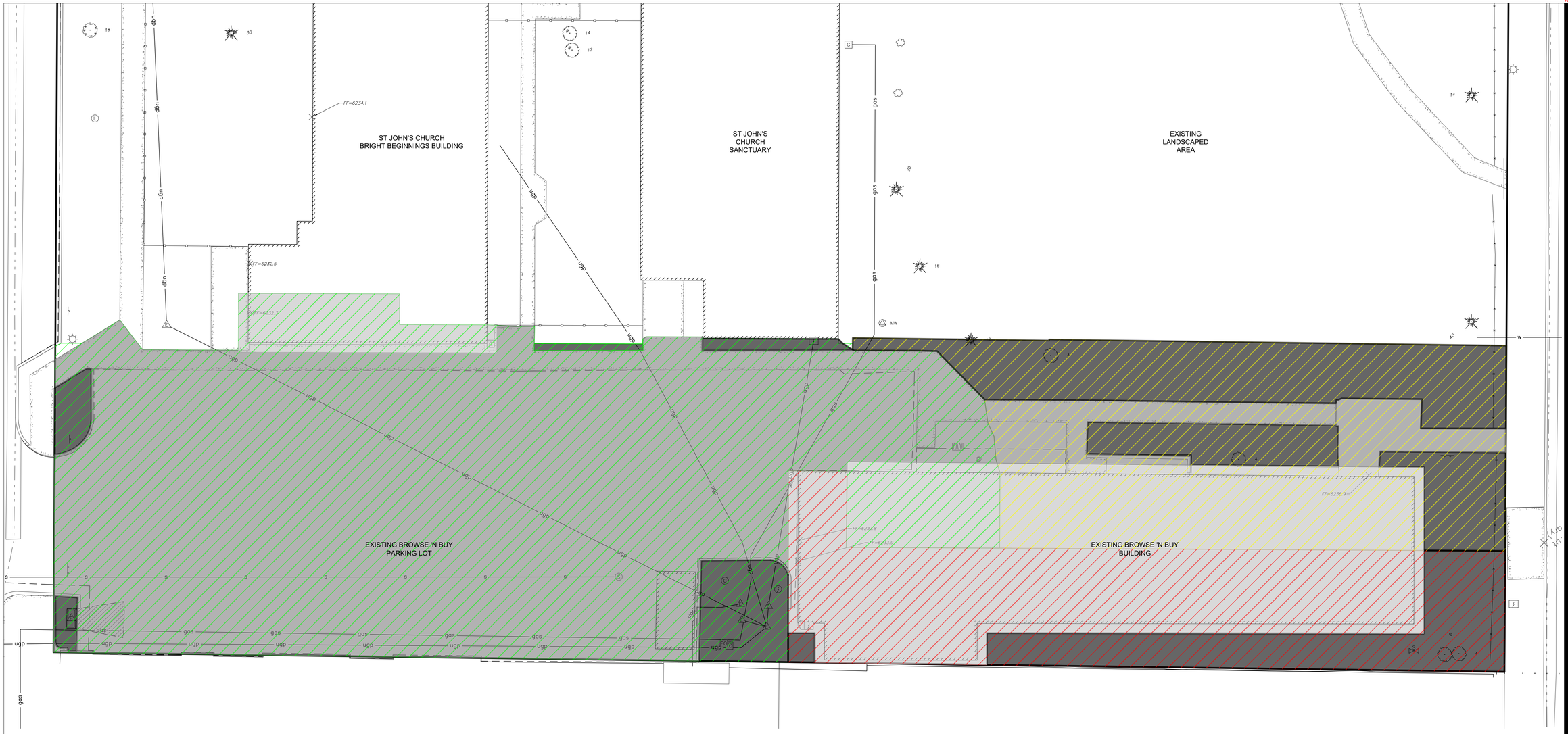

BASIN A

BASIN B

BASIN C

EXISTING PAVED AREAS
(ASPHALT OR CONCRETE)

EXISTING VEGETATED AREA

EXISTING ROOF

NOTE:

BASIN B & BASIN C WERE
COMBINED SINCE EACH INFILTRATE
IN ON-SITE LANDSCAPED AREA

PO Box 9550 | 1315 HWY 89 S., Ste. 201
Jackson, WY 83002
PH: 307.733.5150
www.jorgeng.com

JORGENSEN

Checked By: JL

Drawn By: SW

BROWSE 'N BUY
DEVELOPMENT PLAN

ST JOHN'S EPISCOPAL CHURCH
CACHE STREET CAMPUS

JACKSON, WY

Sheet Title:
EX STM BASINS

Date: 21 Feb 2025

Revisions:

Drawing Number:
STM 1

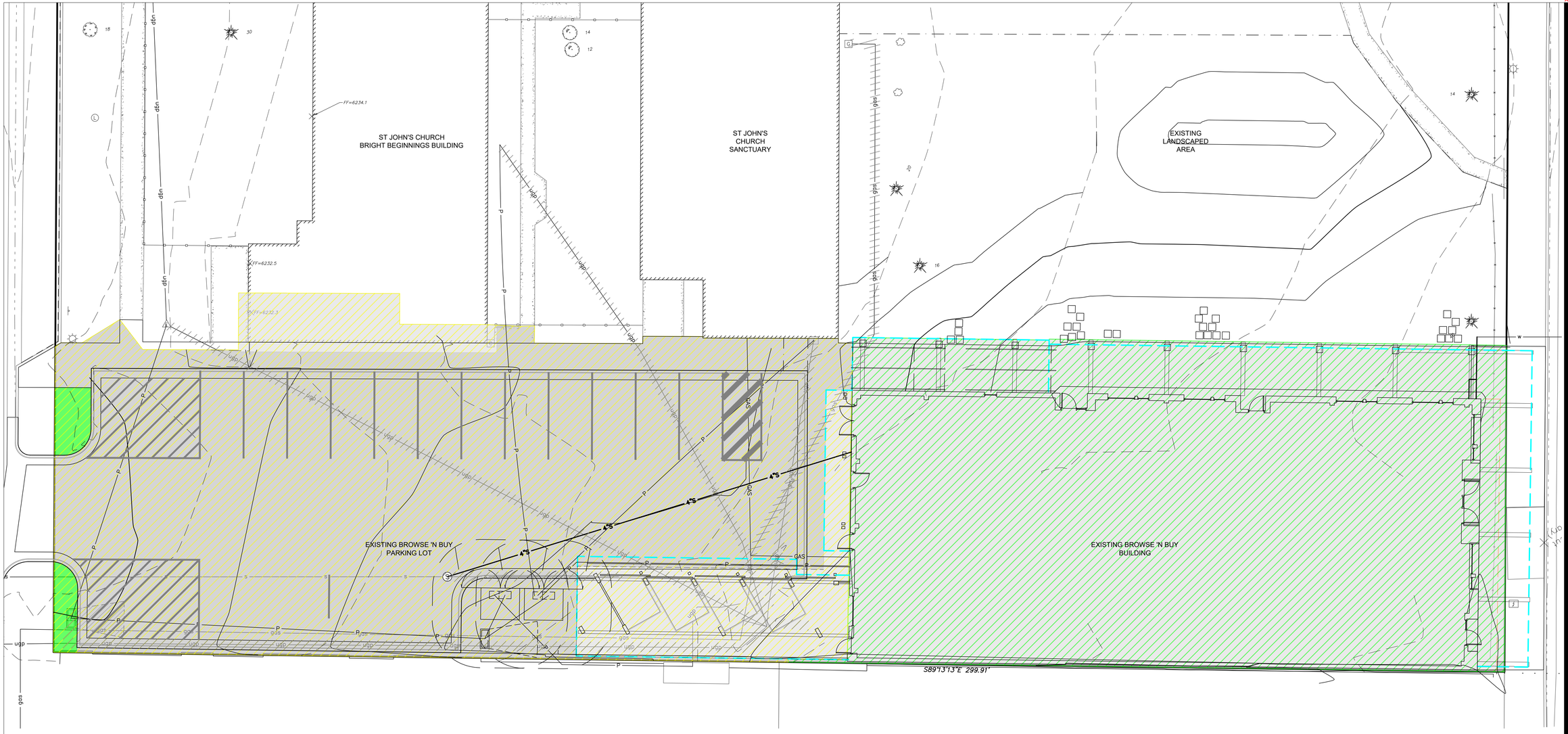

BASIN A

BASIN B

EXISTING PAVED AREAS
(ASPHALT OR CONCRETE)

EXISTING VEGETATED AREA

EXISTING ROOF

PO Box 9550 | 1315 HWY 89 S, Ste. 201
Jackson, WY 83002
PH: 307.733.5150
www.jorgeng.com

JORGENSEN

Checked By: JL

Drawn By: SW

JACKSON, WY

BROWSE 'N BUY
DEVELOPMENT PLAN

ST JOHN'S EPISCOPAL CHURCH
CACHE STREET CAMPUS

Sheet Title:
PRO STM BASINS

Date: 21 Feb 2025

Revisions:

Drawing Number:
STM 2

JORGENSEN
PO Box 9550 | 1315 HWY 89 S., Ste. 201
Jackson, WY 83002
PH: 307.733.5150
www.jorgeng.com

WATER SYSTEM DEMAND PER AMERICAN WATER WORKS ASSOCIATION (M22)

Project Name: St. John's Episcopal Church - Browse' n Buy
Jorgensen Project Number: JA Project No. 23092
Site Calculation Date: 19 Feburary 2025

WATER DEMAND - M22 FIXTURE CALCULATION					
	Fixture	**No. Units**	**Fixtures per Unit[2]**	**Fixture Value[1]**	**Total Fixture Value**
Recovery Community	Kitchen Sink	1	1	1.8	2
	Dishwasher	1	1	1.3	1
Jackson Food Cupboard	Toilet	1	1	6	6
	Lavatory Sink	1	1	1.5	2
Residential Apartments	Toilet	2	1	6	12
	Lavatory Sink	2	1	1.5	3
	Shower	2	1	2.5	5
	Kitchen Sink	2	1	1.8	4
	Dishwasher	2	1	1.3	3
	Laundry (Washer)	2	1	3	6
Mechanical & Common	Toilet	1	5	6	30
	Lavatory Sink	1	8	1.5	12
				TOTAL FIXTURE VALUE	85
				Probable Water Flow Demand (AWWA M22 - Figure 4-3)	58
				Design Pressure Adjustment Factor (AWWA M22 - 60 psi)	1.00
				Adjusted Probable Demand (gpm)[3]	**58**

Note: Domestic use only, no irrigation

Shaw Wyoming
460 South Cache
Jackson, WY 83001
TEL: 303-733-8401

SHAW CONSTRUCTION
www.shawwyoming.com

February 17, 2025

Construction Management Plan: Browse & Buy

139 N. Cache St, Jackson, WY 83001

Project Scope:

The Browse & Buy project will consist of demolishing the existing Browse & Buy building and rebuilding a new building to include: mercantile area, storage & sorting area, recovery community area, Jackson food cupboard, and (2) affordable apartment units. Building will be two stories and utilize the existing St John's Episcopal Church Cache St Campus parking lot accessed off Glenwood St. The estimated start of construction activities is early fall 2025 with an anticipated project duration of 24 months, finishing up in September 2027.

Public Impact:

Shaw will coordinate with Town of Jackson (TOJ) to identify the properties and businesses most impacted by the construction to create an email contact list, to provide information as the project schedule and work. This list is attached at the end of this submission and includes the TOJ Engineering Division. Shaw will work to minimize any effect on adjacent properties by maintaining proactive communication including giving a minimum 48-hour notice of any closures and after-hours work. Shaw acknowledges that the right-of-way (R.O.W.) is a shared public use area and will coordinate with TOJ and neighbors for special event planning and construction activities that will encroach on the R.O.W. Along Cache Street, Shaw will maintain a sidewalk with a covered walkway during the duration of the project to minimize any inconvenience to pedestrian traffic. If necessary, Shaw will submit R.O.W. permits for temporary and intermittent sidewalk closures and have all required signage in place. Along Glenwood Street, pedestrian traffic impact will be minimal. A temporary sidewalk and street half-lane closure will be necessary for new fence and piers and curb adjustment per approved Civil drawings. There will be minimal impact to parking along Cache Street, only one spot affected for specialty deliveries (a ROW permit will be submitted anytime this is necessary). There should be no impact to parking along Glenwood Street as the project will utilize the existing parking lot entrance to the property. Additional information about parking, street and alley encroachments will be described in the section below.

Construction Parking:

Shaw shall implement a clear and self-enforcing construction parking plan that does not use/or encumber downtown on street and/or public parking lot parking spaces. The plan specifies that employee or

Shaw Wyoming
460 South Cache
Jackson, WY 83001
TEL: 303-733-8401

SHAW CONSTRUCTION
www.shawwyoming.com

contractor parking within time restricted parking zones, the Home Ranch, East Deloney, Miller Park and/or the Parking Garage lots is not allowed. Contractor will encourage carpooling and bus riding, and when possible, provide shuttles into the project. See below for subcontractor parking availability at lay-down locations. Contractor is also going to utilize 6 parking spots on the clients property for subcontractor parking.

Site Logistics, General Staging Plan:

A site logistics plan is attached to this submission. On site, there will be the job office trailer, temporary toilets, dumpsters, a limited lay-down area, and limited worker parking. Throughout the entirety of the project, two off-site lay-down yards and worker parking areas will be maintained at 175 N Willow St and Deer Drive by Shaw. The N Willow location will contain site lay-down areas and additional contractor parking. The Deer Drive location will contain lay-down for material staging. Enclosed containers will be utilized to transport materials and waste between site and lay-down yards. The entire site and lay-down areas will be surrounded by temporary metal construction fences with fabric screen. The fence will be placed as drawn in the site logistics plan. Worker and vehicle access points and gates in the fence will be at the existing Glenwood St entrance to the site. A secondary gate will be set at the north edge of the site along Cache Street. All vehicle gates will include vehicle tracking control pads as needed and a skid steer with sweeper attachment will remain on site to maintain clean roads. Throughout all stages, trucks arriving or leaving site will utilize the town truck route. Workers will utilize portable restrooms on site (Port-a-Johns) that will be contained within the site fence at all stages.

Construction work hours, unless by special exception, will be Monday-Friday 7AM-7PM and 8AM-5PM during weekends and holidays.

Parking, Street, and Alley Encroachments:

It is anticipated that site logistics will require portions of the adjacent street travel lanes and parking spaces to be occupied by construction deliveries and curb construction at different times during the project. The attached site logistics plan shows the areas that will be affected on a temporary and intermittent basis. There will be no construction scaffolding, fencing, or barrier protection that encroaches on the alley on a permanent basis. Shaw will coordinate with Town officials and adjacent property owners to minimize the impact of these encroachment activities and to assure all Town rules and permitting procedures are properly followed. Intermittent encroachments in parking along Cache Street will be necessary during construction deliveries and are rarely anticipated to be required. Boom trucks will be utilized before and after the duration of the self-erect crane. Public safety will be held paramount during crane and concrete pumping activities. All necessary permits will be obtained prior to any closures, including a traffic control plan.

Shaw Wyoming
460 South Cache
Jackson, WY 83001
TEL: 303-733-8401

SHAW CONSTRUCTION
www.shawwyoming.com

Stormwater Management:

All erosion control measures and BMPs will be implemented per plan as developed by the civil engineer, including inlet protection and perimeter controls. Vehicle tracking control mats will be installed and maintained at all vehicle access points as needed. Temporary toilets will be properly bedded and staked. Gas, diesel, and oils will be stored in proper containment vessels.

Snow Removal:

Snow removal within the property will be removed to an off-site snow storage location. Shaw will have the snow removed as needed as it is plowed in coordination with the TOJ plowing efforts to keep fencing areas clear and accessible for either street parking or access to the job site. Site barriers shall not interfere with Town snow removal.

Performance Bonds and Guarantees:

If any additional activities require bonding Shaw will provide bonds prior to commencing work. Please see attached letter from surety confirming bonding capacity.

Business Name	Contact Name	Phone	Email
Town of Jackson			townengineering@jacksonwy.gov
The Kitchen	Justin	(307) 734-1633	justin@jhfinedining.com
The Kitchen	Jaimy	(307) 734-1633	jaimy@jhfinedining.com
Hotel Jackson	Michael Gray	(307) 733-2200	mgray@hoteljackson.com

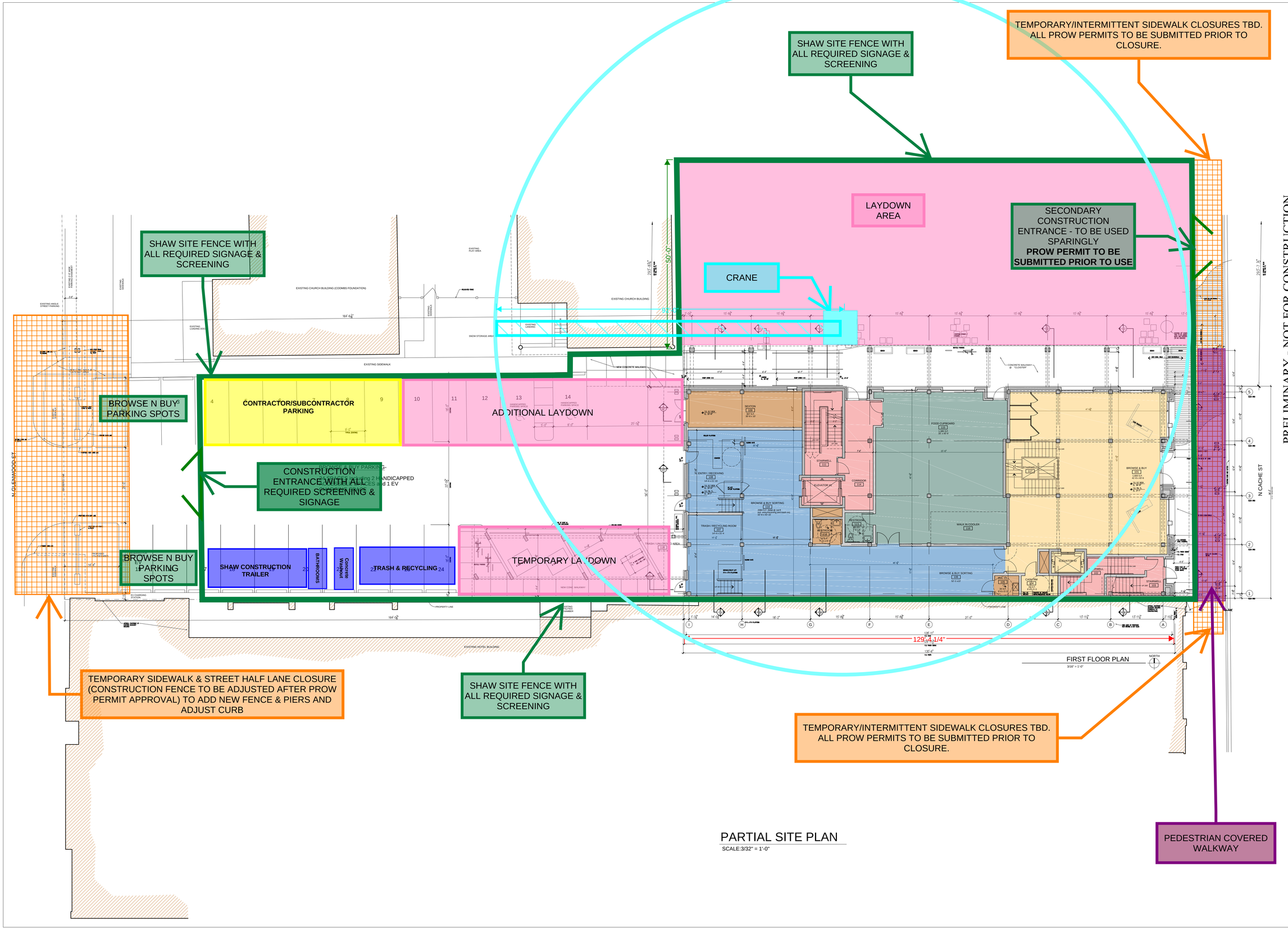

PARTIAL SITE PLAN
SCALE:3/32" = 1'-0"

PRELIMINARY - NOT FOR CONSTRUCTION

POST OFFICE BOX 1249
265 EAST KELLY AVENUE
JACKSON, WYOMING 83001
T: 307.733.4364
F: 307.733.4365
info@hawtinjorgensen.com

Hawtin Jorgensen ARCHITECTS

Drawn By:
Checked By: Arne Jorgensen

Browse & Buy Building
Design Development

St. John's Episcopal Church
Cache Street Campus

Jackson, Wyoming

Sheet Title:
Site Plan

Date: 9/10/24
Revisions:
Arch. Progress Issue 9/10/24

Drawing Number:
A1.3

Scale Accurate on 24 x 36 Sheets

SECTION 4 – SUPPORTING MATERIALS

- **TETON COUNTY COMPREHENSIVE PLAN DISTRICT 1 SUBAREA 1.2 AND DISTRICT 2 SUBAREA 2.3**
- **NEIGHBORHOOD MEETING SUMMARY**
- **FAR CALCULATIONS**
- **HOUSING DEPARTMENT CHECKLISTS**

Character Defining Features

1.1: Inner Square

Town Form

This STABLE Subarea will focus on maintaining western character by retaining or replicating the built environment. Building heights directly fronting the Town Square should not exceed two stories. Buildings should be located near the street to create an attractive street front. A desired western architectural style and approach will be defined. The continuation of covered wooden boardwalks is vital to maintaining the desired western character. Parking will be provided predominately in public lots, underground, and on street to create a vibrant, walkable area oriented to pedestrians.

1.2: Outer Square

Town Form

This STABLE Subarea will focus on maintaining western character consistent with the character of the district. Building heights will be allowed up to three stories, to provide lodging, residential and other non-residential uses on upper floors supporting our tourist economy and Growth Management goals. Buildings should be located near the street to create an attractive street front. A desired western architectural style and approach will be defined in coordination with the Inner Square (Subarea 1.2). The continuation of covered wooden boardwalks is vital to maintaining the desired western character. Parking will be provided predominately in public lots, underground, and on street to create a vibrant, walkable area oriented to pedestrians.

2.3: Downtown

Town Form

This large, mixed use, TRANSITIONAL Subarea currently consists of a variety of retail, restaurant, office and other commercial activities, along with long-term residences and lodging in a variety of building sizes and forms. Downtown is the center of civic, cultural, economic and social activity for our community as well as the center of the visitor experience, as a significant amount of lodging is located here. The 2012 character and built form is varied and inconsistent.

The goal of this subarea is to create a vibrant mixed use area by accommodating a variety of uses and amenities. The subarea will be the starting point for the development of a refined Lodging Overlay boundary and future discussion of the type and size of lodging desired. A key challenge will be to provide a balance between lodging and long-term residential housing. Future structures will be predominantly mixed use, while multifamily structures will be allowed if it properly addresses the street. Commercial uses that create an active and engaging pedestrian experience will be predominantly located on the first and second floors of buildings. Examples of these uses include restaurants, bars, a variety of retail shops and commercial amusement. Furthermore, as portions of the subarea will be located within a future Downtown Retail Shopping District, uses such as office, residential and lodging will be predominantly located on upper floors.

A goal of this subarea will be to create a consistent building size and form. In the future, a variety of two to three story buildings are desired. A fourth floor could be considered when a project is providing additional benefits such as, workforce housing. Buildings should be located to create an attractive street wall and take advantage of good urban design principles including massing, articulation and the provision of public space. The pedestrian realm will be of great importance in this mixed use subarea, and emphasis should be placed on adding improvements focusing on the pedestrian experience. Parking should continue to be provided predominately in public lots and on street to create a vibrant, walkable area that is oriented to the pedestrian. On-site parking should be predominantly underground or screened from view. Future redevelopment should enhance the Flat Creek corridor for recreational and ecological purposes. Buildings should front onto the creek to provide opportunities for interaction and enjoyment of this community resource.

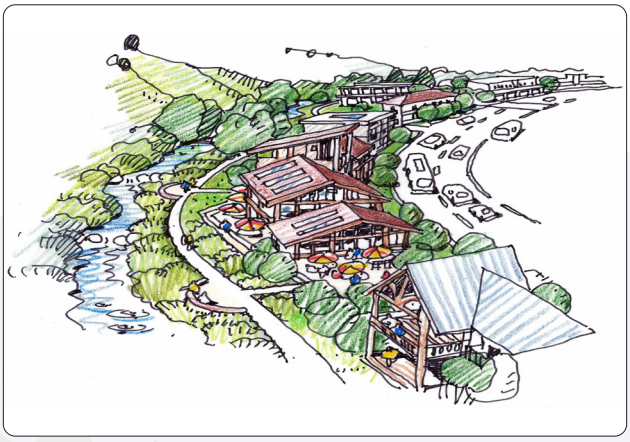

JORGENSEN

PO Box 9550 | 1315 HWY 89 S., Ste. 201
Jackson, WY 83002
PH: 307.733.5150
www.jorgeng.com

NEIGHBORHOOD MEETING SUMMARY

A neighborhood meeting was held to discuss the proposed Development Plan for a new Browse 'N Buy on Thursday, January 16th, 2025 between 4pm and 6pm with approximately 15 attendees, though only one signed the attached sign-in sheet. The meeting was generally positive, with participation from the parishioners, church staff, project staff, and neighboring property and business owners. Key issues raised included concerns about parking, details of construction, gaps in retail frontage, and potential for collaboration with neighboring businesses.

Comments were collected and included:

“Browser is going to rawk!”

The attached invitations were sent to 55 addresses 13 days prior to the meeting. These included everyone within a 200’ buffer of the property boundary. The address list is attached. Three public notice signs were posted on the property on January 6th and left up for 10 days prior to the meeting (photos attached).

St. John's Episcopal Church

Neighborhood Meeting
Development Plan
Thursday, January 16th, 2025

	NAME	PHYSICAL ADDRESS	EMAIL
1	SADEK D	777 E SIMPSON	Sadekd@gmail.com
2			
3			
4			
5			
6			
7			
8			
9			
10			
11			
12			
13			
14			
15			
16			
17			
18			
19			
20			

January 3rd, 2025

St. John's Episcopal Church
Browse N Buy

St. John's Episcopal Church of Jackson Hole will be seeking approval to replace the existing Browse N Buy on the 2.4-acre parcel (PIDN: 22-41-16-28-4-09-005) owned by the church on Glenwood St northwest of the Town Square. The proposed two-story building will be approximately 26,002 SF with a basement and aims to enhance the church's ability to serve the community with expanded space to meet multiple needs.

The new building will house the Browse N Buy retail, storage, and sorting spaces, as well as the Jackson Cupboard. There will also be offices and two residential apartments. In addition, there will be dedicated meeting space for the recovery community and other church functions.

The project team is composed of Hawtin Jorgensen and Jorgensen Associates, Inc.

You are invited to attend a neighborhood meeting to learn more about the proposed development. The meeting will be held at:

St John's Episcopal Church of Jackson Hole
Thursday, January 16th, 2025
4:00pm – 6:00pm

Attached:

1) Site Plan
2) Renderings

For questions please contact:
Mila Dunbar-Irwin – mdi@jorgeng.com

Applicant Submittal Page 64 of 110

BROWSE & BUY

PHYSICAL ADDRESS: 139 N. Cache Street
LOT, SUBDIVISION: Lots 1-7 & 14-20, Block 7, Jackson Original Townsite
ZONING: Town Square-2 (TS-2)
ZONING OVERLAYS: Lodging Overlay, Downtown Design Overlay-2 (Western Character)

STREET FRONTAGE TYPE: Covered Walkway
BUILDING FRONTAGE TYPE: Town Square

LDR COMPLIANCE SUMMARY

	REQUIREMENT	PROPOSED	COMPLIANCE
PRIMARY STREET SETBACK RANGE (MIN/MAX)	0' to 5'	4'-6" at first fl 6" at second fl	complies
SECONDARY STREET SETBACK RANGE (MIN/MAX)	0' to 5' (N/A)	283'-4"	complies
LANDSCAPE SURFACE RATIO (MIN)	TO BE DETERMINED	TO BE DETERMINED	complies
PLANT UNITS (MIN)	TO BE DETERMINED	TO BE DETERMINED	complies
PARKING REQUIREMENTS	TO BE DETERMINED	TO BE DETERMINED	
BUILDING HEIGHT (MAX.)	42'	37'-1"	complies
STORIES (MAX.)	3	2	complies
FLOOR AREA RATIO (FAR MAX.)	1.83	0.331	complies
PEDESTRIAN FRONTAGE	COVERED WALKWAY	COVERED WALKWAY	complies
BUILDING FRONTAGE TYPE	TOWN SQUARE	TOWN SQUARE	complies
AFFORDABLE HOUSING	1.784	2	complies

DRC SUBMITTAL DRAWING LIST

SITE-1 PARTIAL SITE PLAN
SITE-2 OVERALL SITE PLAN SHOWING LANDSCAPING OF EXIST. CAMPUS
A2.1 BASEMENT FLOOR PLAN
A2.2 FIRST FLOOR PLAN
A2.3 SECOND FLOOR PLAN
A3.1 BUILDING ELEVATIONS
A3.2 BUILDING ELEVATIONS
A3.3 PARTIAL ELEVATIONS
A4.1 EXTERIOR RENDERING VIEWS
A4.2 EXTERIOR RENDERING VIEWS

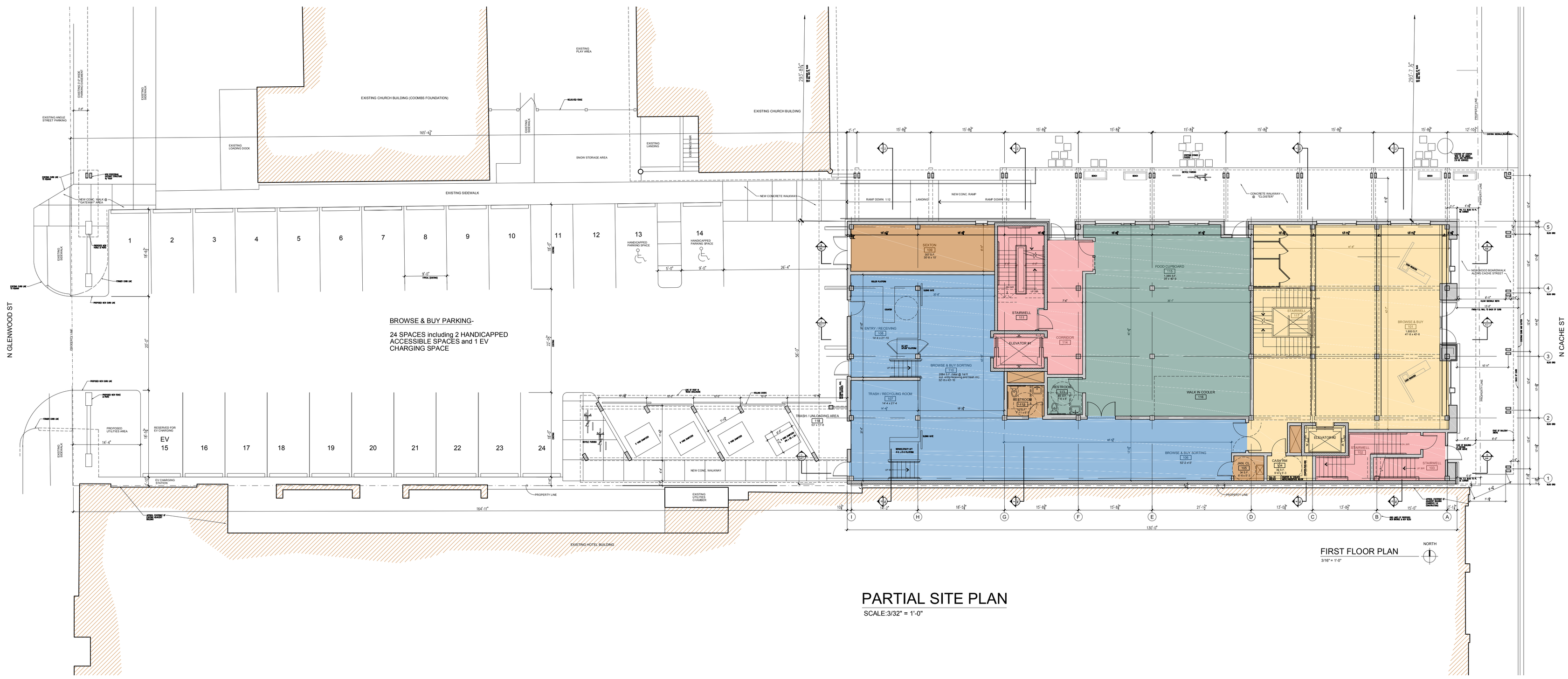

PARTIAL SITE PLAN

SCALE:3/32" = 1'-0"

POST OFFICE BOX 1249
265 EAST KELLY AVENUE
JACKSON, WYOMING 83001
T: 307.733.4364
F: 307.733.4365
info@hawtinjorgensen.com

Hawtin Jorgensen ARCHITECTS

Drawn By:
Checked By: Arne Jorgensen

BROWSE & BUY BUILDING

DESIGN REVIEW COMMITTEE SUBMITTAL

JACKSON, WYOMING

ST. JOHN'S EPISCOPAL CHURCH
CACHE STREET CAMPUS

SHEET TITLE:
SCHEMATIC SITE PLAN

DATE: 5/22/24

REVISIONS:
DRC SUBMITTAL 5/22/24

DRAWING NUMBER:
SITE-1

SCALE ACCURATE ON 24 X 36 SHEETS

Applicant Submittal Page 65 of 110

CACHE ST OBLIQUE VIEW - SE CORNER OF BUILDING

NO SCALE

NORTH ELEVATION

NO SCALE

EAST ELEVATION (CACHE ST)

NO SCALE

OBLIQUE CLOSEUP OF NE CORNER (CACHE ST)

NO SCALE

POST OFFICE BOX 1249
265 EAST KELLY AVENUE
JACKSON, WYOMING 83001
T: 307.733.4364
F: 307.733.4365
info@hawtinjorgensen.com

Hawtin Jorgensen ARCHITECTS

Drawn By:
Checked By: Arne Jorgensen

Browse & Buy Building

Design Review Committee Submittal

St. John's Episcopal Church
Cache Street Campus

Jackson, Wyoming

Sheet Title:
EXTERIOR RENDERINGS

Date: 5/22/24

Revisions:
DRC Submittal
5/22/24

Drawing Number:
A4.1

Scale Accurate on 24 x 36 Sheets

FPI JACKSON HOMES LLC
225 BUSH ST, STE 1800
SAN FRANCISCO, CA 94104

MILES WEST, LLC
1735 BUFORD HWY, STE 215-137
CUMMING, GA 30041

ROLLING HILLS CC
INVESTMENT LLC
280 LAS ENTRADAS DR
MONTECITO, CA 93108

PAUL JOSEPH & VIVIEN JEANETTE
ZEPF REVOCABLE TRUSTS
PO BOX 1564
JACKSON, WY 83001

D.F.W. FAMILY TRUST
5350 POPLAR AVE, STE 650
MEMPHIS, TN 38119

FPI JACKSON HOMES LLC
225 BUSH ST, STE 1800
SAN FRANCISCO, CA 94104

GLJH LLC C/O KELLIE ABREU
745 MARINA BLVD
SAN FRANCISCO, CA 94123

KYLE THERET
1975 MILE HIGH STADIUM CIR, PH
HOUSE 03
DENVER, CO 80204

JH GLENWOOD UNIT 2, LLC
ATTN. JEFFREY W. WALBRIDGE
610 NEWPORT CENTER DR, STE 1700
NEWPORT BEACH, CA 92660

PATRICK L. & SHANNON G.
SPENCER
3465 N PINES WAY, STE 104 PMB 101
WILSON, WY 83014

EDMOND & SONIA JAY
205 DOUGLAS RD
FAR HILLS, NJ 79312

ROBERT & BRENDA MERCER
REVOCABLE TRUST
PO BOX 454
TETON VILLAGE, WY 83025

185 NORTH GLENWOOD STREET 3
LLC
C/O PACASO INC.
18 E 4TH ST, UNIT 902
CINCINNATI, OH 45202

ELEVEN GLENWOOD LLC
PO BOX 1551
WILSON, WY 83014

FPI JACKSON HOMES LLC
22 BUSH ST, STE 1800
SAN FRANCISCO, CA 94104

ECHOSKAY LLC
PO BOX 4422
JACKSON, WY 83001

DEAF SMITH LLC
32 SADDLE CLUB DR
MIDLAND, TX 79705

NICK STARAI REVOCABLE TRUST
970 W BROADWAY AVE, STE E-479
JACKSON, WY 83001

PINE TREE CORPORATION
PO BOX 1677
JACKSON, WY 83001

PINE TREE CORPORATION
PO BOX 1677
JACKSON, WY 83001

ANVIL HOTEL PARTNERS, LLC
372 COURT ST, FLOOR # 2
BROOKLYN, NY 11231

TETON GABLES, LLC
PO BOX 6467
JACKSON, WY 83002

ANVIL HOTEL PARTNERS, LLC
372 COURT ST, FLOOR # 2
BROOKLYN, NY 11231

EPISCOPAL CHURCH IN JACKSON
HOLE, WY
PO BOX 1690
JACKSON, WY 83001

ROBIN S. THOENIG
PO BOX 649
JACKSON, WY 83001

STAGE STOP INC.
PO BOX 1677
JACKSON, WY 83001

LIVE OAK SPRINGS, LLC
PO BOX 1849
JACKSON, WY 83001

STAGE STOP INC.
PO BOX 1677
JACKSON, WY 83001

STAGE STOP INC.
PO BOX 1677
JACKSON, WY 83001

STAGE STOP, INC.
PO BOX 1677
JACKSON, WY 83001

UNTURNED STONE, LLC
PO BOX 2788
JACKSON, WY 83001

CRABTREE & LEED LLC
PO BOX 2223
JACKSON, WY 83001

STAGE STOP, INC.
PO BOX 1677
JACKSON, WY 83001

GASLIGHT PROPERTIES, LTD.
PO BOX 1845
JACKSON, WY 83001

GLENWOOD JH, INC.
4011 80TH ST
KENOSHA, WI 53142

ELIZABETH LOCKHART
PO BOX 3157
JACKSON, WY 83001

I.O.O.F. #8
PO BOX 586
JACKSON, WY 83001

GILL FAMILY, LLC
2505 SHOOTIN IRON RANCH RD
JACKSON, WY 83001

PHANTOM PARTNERS LLC
6545 N VISTA LN
JACKSON, WY 83001

GILL FAMILY, LLC
2505 SHOOTIN IRON RANCH RD
JACKSON, WY 83001

GILL FAMILY, LLC
2505 SHOOTIN IRON RANCH RD
JACKSON, WY 83001

BIG MOUNTAIN ENTERPRISES, LLC
PO BOX 2812
JACKSON, WY 83001

THE RALPH GILL LLC
PO BOX 128
JACKSON, WY 83001

SUGA PROPERTIES, LLC
737 N MICHIGAN AVE, STE 1810
CHICAGO, IL 60611

BIVOUAC PEAK LLC
C/O CHARLES SCHAAP
PO BOX 3928
JACKSON, WY 83001

JOHN L. JR. & BEVERLY R. SCOTT
PO BOX 1320
DESTIN, FL 32540

AMERICAN LEGION JACKSON'S HOLE
190 N CACHE STREET
JACKSON, WY 83001

GEN4 LLC
PO BOX 2317
JACKSON, WY 83001

TOWN OF JACKSON
PO BOX 1687
JACKSON, WY 83001

NAVISTAR REAL ESTATE, LLC
1046 S WASHINGTON ST
AFTON, WY 83110

GLENWOOD 14, LLC
C/O JUSTIN BAILEY
7710 EL PENSADOR DR
DALLAS, TX 75248

ZENDLER CLEMENS, LLC
PO BOX 10039
JACKSON, WY 83002

OWL PEAK LLC
217 S GALENA ST
ASPEN, CO 81611

TIKI TOWER LLC
PO BOX 9149
JACKSON, WY 83002

JACKSON SQUARE LLC, GCM 2 LLC,
JACKSON DLP LLC, & KHAZAD-DUM
1621 CENTRAL AVE
CHEYENNE, WY 82001

Notice of Neighborhood Meeting

St. John's Episcopal Church of Jackson Hole intends to submit a Development Plan to the Town of Jackson to replace the existing Browse N Buy on the lot owned by St. John's Episcopal Church on Cache St northwest of the Town Square.
The proposed development consists of a multi-use 26,002 SF two-story building with a basement that will enhance the church's ability to serve the community.

Please attend this open house to take advantage of an opportunity to review the design, ask questions about what is being proposed, and provide feedback.
Refreshments and snacks provided.

Hansen Hall at St. John's Episcopal Church of Jackson Hole
Thursday, January 16th, 2025 from 4:00pm to 6:00pm
170 N Glenwood St, Jackson, Wyoming
Posting Date: Monday, January 6th, 2025

For more information, contact Mila Dunbar-Irwin at mdi@jorgeng.com

Notice of Neighborhood Meeting

St. John's Episcopal Church of Jackson Hole intends to submit a Development Plan to the Town of Jackson to replace the existing Browse N Buy on the lot owned by St. John's Episcopal Church on Cache St northwest of the Town Square.
The proposed development consists of a multi-use 26,002 SF two-story building with a basement that will enhance the church's ability to serve the community.

Please attend this open house to take advantage of an opportunity to review the design, ask questions about what is being proposed, and provide feedback.
Refreshments and snacks provided.

Hansen Hall at St. John's Episcopal Church of Jackson Hole
Thursday, January 16th, 2025 from 4:00pm to 6:00pm
170 N Glenwood St, Jackson, Wyoming
Posting Date: Monday, January 6th, 2025

For more information, contact Mila Dunbar-Irwin at mdi@jorgeng.com

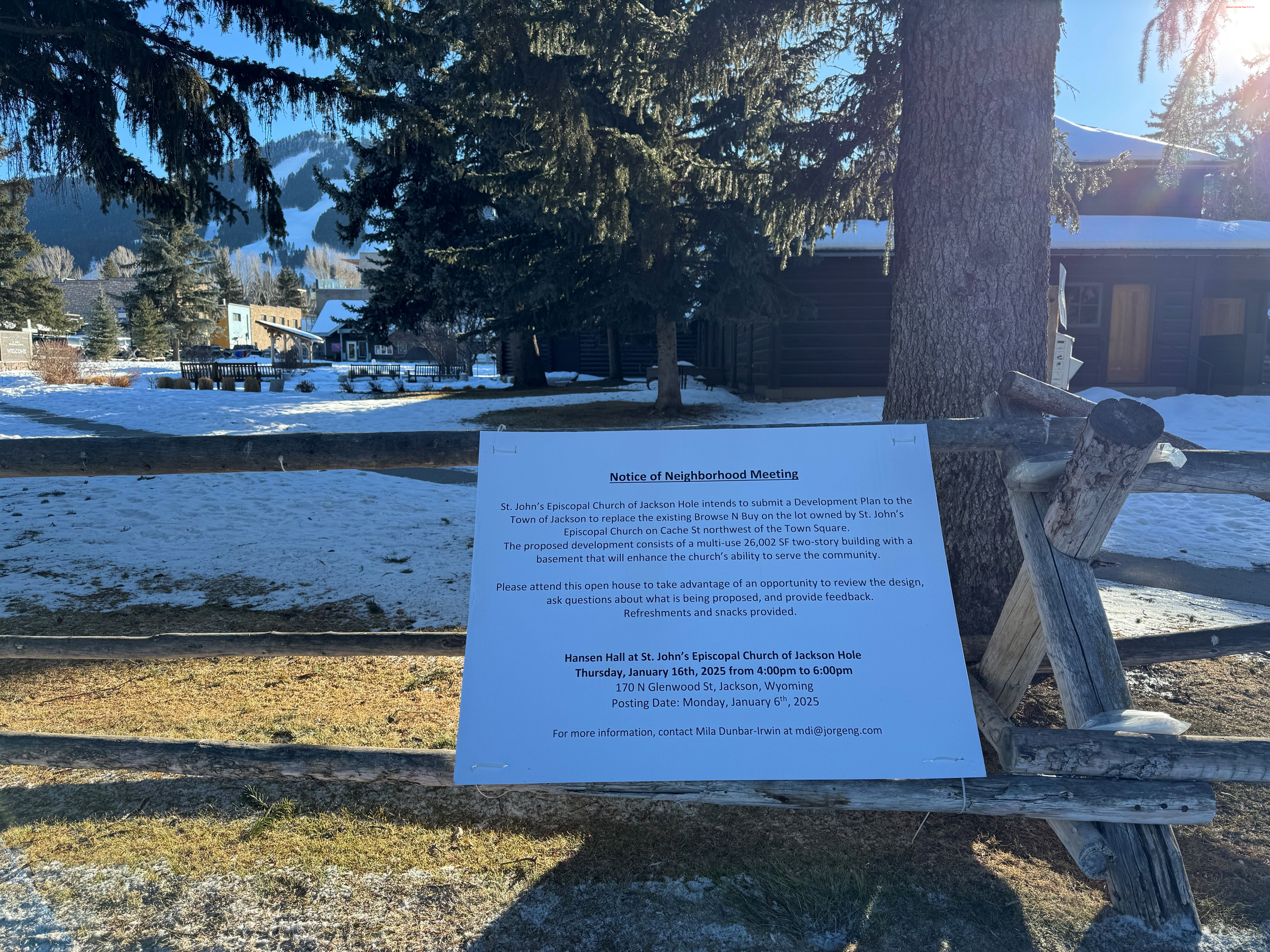
WELCOME
Notice of Neighborhood Meeting
St. John's Episcopal Church of Jackson Hole intends to submit a Development Plan to the Town of Jackson to replace the existing Browse N Buy on the lot owned by St. John's Episcopal Church on Cache St northwest of the Town Square.
The proposed development consists of a multi-use 26,002 SF two-story building with a basement that will enhance the church's ability to serve the community.
Please attend this open house to take advantage of an opportunity to review the design, ask questions about what is being proposed, and provide feedback.
Refreshments and snacks provided.
Hansen Hall at St. John's Episcopal Church of Jackson Hole
Thursday, January 16th, 2025 from 4:00pm to 6:00pm
170 N Glenwood St, Jackson, Wyoming
Posting Date: Monday, January 6th, 2025
For more information, contact Mila Dunbar-Irwin at mdi@jorgeng.com

Notice of Neighborhood Meeting

St. John's Episcopal Church of Jackson Hole intends to submit a Development Plan to the Town of Jackson to replace the existing Browse N Buy on the lot owned by St. John's Episcopal Church on Cache St northwest of the Town Square.
The proposed development consists of a multi-use 26,002 SF two-story building with a basement that will enhance the church's ability to serve the community.

Please attend this open house to take advantage of an opportunity to review the design, ask questions about what is being proposed, and provide feedback.
Refreshments and snacks provided.

Hansen Hall at St. John's Episcopal Church of Jackson Hole
Thursday, January 16th, 2025 from 4:00pm to 6:00pm
170 N Glenwood St, Jackson, Wyoming
Posting Date: Monday, January 6th, 2025

For more information, contact Mila Dunbar-Irwin at mdi@jorgeng.com

JORGENSEN
PO Box 9550 | 1315 HWY 89 S., Ste. 201
Jackson, WY 83002
PH: 307.733.5150
www.jorgeng.com

Section 4.3: FAR Calculations

FAR Original*				
Use	**Basement**	**First Floor**	**Second Floor**	**Total**
Browse N Buy	3,575	4,134	4,017	11,726
Recovery Meeting Space	1,911	-	-	1,911
Jackson Cupboard	-	1,540	-	1,540
Residential Apartments	-	-	2,139	2,139
Total	5,486	5,674	6,156	17,316
*From Arch Set, not including mechanical/circulation area				

Proportion of Uses						
Use	**Basement**		**First Floor**		**Second Floor**	
Browse N Buy	3,575	0.65	4,134	0.73	4,017	0.65
Recovery Meeting Space	1,911	0.35	-	-	-	-
Jackson Cupboard	-	-	1,540	0.27	-	-
Residential Apartments	-	-	-	-	2,139	0.35
Total	5,486		5,674		6,156	

Distribution of Mechanical/Circulation FAR						
	Basement		**First Floor**		**Second Floor**	
Use	**Divisible FAR**	**FAR Added**	**Divisible FAR**	**FAR Added**	**Divisible FAR**	**FAR Added**
Mechanical & Common	842		484		214	
Circulation & Egress	983		930		1,175	
Total Divisible	1,825		1,414		1,389	
Browse N Buy		1,189		1,030		906
Recovery Meeting Space		636		0		0
Jackson Cupboard		0		384		0
Residential Apartments		0		0		483

FAR Adjusted*				
Use	**Basement**	**First Floor**	**Second Floor**	**Total**
Browse N Buy	4,764	5,164	4,923	14,852
Recovery Meeting Space	2,547	-	-	2,547
Jackson Cupboard	-	1,924	-	1,924
Residential Apartments	-	-	2,622	2,622
Total	7,311	7,088	7,545	21,944
*Including distributed mechanical/circulation area				

JACKSON/TETON COUNTY AFFORDABLE HOUSING

Livability Standards Questionnaire

Housing Mitigation Plan

Development Name Browse 'N Buy Building

Physical Address 139 N Cache St.

Owner Name St John's Episcopal Church of Jackson Hole

Owner Phone _____ E-mail _____

Applicant/Agent Name _____

Applicant/Agent Phone _____ E-mail _____

Primary Contact: _____ Owner _____ Applicant/Agent

Please complete this form for each unit type. Complete each question that applies to your application. If it doesn't apply mark N/A in the blank.

Unit Type:

Number of bedrooms 1 Square Feet 1,003 Ownership ☐ Rental ☐

Kitchen

Lineal feet of base cabinets 11'-0 Lineal Feet of upper cabinets 7'-6

Continuous Lineal feet of countertops 18'-6 Countertop Material Solid Surface

Sink width 30 Range/Oven width 30 Refrigerator cubic feet 22

Dishwasher width 24 Garbage Disposal? Yes ☐ No ☑

List other appliances provided _____

List Warranties on appliances (years): Range/Oven 2 Refrigerator 5 Dishwasher 1

Garbage Disposal ☐ Other _____

Bathrooms

Number of bathrooms _ Does at least one bathroom contain the following?

Toilet ☑ Bathtub ☐ Shower ☑ Sink ☑

Bathroom must contain a minimum of four square feet of storage. Describe how bathroom storage is being provided Base cabinetry at sink vanity

Closets and Storage Areas

Does each bedroom have a closet? Yes ☑ No ☐

Does each bedroom closet contain a shelf and rod? Yes ☑ No ☐

Bedroom closet width: bedroom 1 5'-7 bedroom 2_____ bedroom 3_____

Bedroom closet height: bedroom 1 9'-0 bedroom 2_____ bedroom 3_____

Does the entryway have a closet? Yes ☑ No ☐ If no, describe how adequate storage for coats, shoes/boots is being provided _____

Linen closet width: Linen closet 1 3'-4 Linen closet 2 _____

Additional storage square feet 116

Describe how additional storage requirement is being met Pantry / broom closet of 6.5 sf and separate storage room of 110 sf

Closet door type (doors not required on interior storage) bi-fold

Are all closets a minimum of 26 inches deep? Yes ☑ No ☐

Floor Coverings

Describe floor covering material:

Living room Vinyl Plank Bedroom(s) Vinyl Plank

Kitchen Vinyl Plank Bathroom(s) Ceramic Tile

Warranty for each flooring type Lifetime limited

Room Sizes and Shape

Provide Measurement from the narrowest part of the room; length x width.

Kitchen 14'-6 x 7'-9 Dining 11'-0 x 8'-0 (overla

Bedroom 1 14'-3 x 10'-0 Bedroom 2_____ Bedroom 3 _____

Functional Furniture Placement diagram attached? Yes ☑ No ☐

Windows/Noise Mitigation

Does each living area and bedroom have a window that can be opened? Yes ☑ No ☐

For units that share walls with other residential or non-residential spaces, please describe noise mitigation being provided. STC 56 double stud wall between units, gasketed doors @ entry and btwn units, triple-glazed windows, continuous insulation at exterior walls, insulated ceiling cavity.

What is the Sound Transmission Class (STC) rating on all windows? 40

Are blinds being provided? Yes ☑ No ☐ If yes, on which windows and what type? cellular horiz. blinds all windows

Laundry

Are washer/dryer hookups being provided (required in ownership units)? Yes ☑ No ☐

Heating and Hot Water

Warranty on furnace, boiler, or hot water heater (5 year minimum) NA

Size of hot water heater NA

Other Design Features

The following features are encouraged and may be used in the place of other requirements with approval from the Housing Department:

Describe any built in storage such as drawers under beds, stairs, etc. PANTRY / BROOM CLOSET

Describe creative shelving

Describe laundry area SIDE BY SIDE WASHER DRYER SET INTO 4'-4" WIDE CLOSET W/ BI-FOLD DOORS. DOORS REMAIN IN OPEN POSITION WHEN UNITS ARE IN USE.

Describe extra storage for recreational equipment STORAGE ROOM W/ DESIGNATED BICYCLE STORAGE.

Describe extra cabinetry

Describe extra closets 2'-8" X 2'-6" FULL HT. PANTRY / BROOM CLOSET W/ SHELVES 1'-0" O.C. ONE HALF AND OPEN OTHER HALF

Please attach additional pages if needed.

JACKSON/TETON COUNTY AFFORDABLE HOUSING

Livability Standards Questionnaire

Housing Mitigation Plan

Development Name Browse 'N Buy Building

Physical Address 139 N Cache St.

Owner Name St John's Episcopal Church of Jackson Hole

Owner Phone _____ E-mail _____

Applicant/Agent Name _____

Applicant/Agent Phone _____ E-mail _____

Primary Contact: _____ Owner _____ Applicant/Agent

Please complete this form for each unit type. Complete each question that applies to your application. If it doesn't apply mark N/A in the blank.

Unit Type:

Number of bedrooms 2 Square Feet 1,092 Ownership ☐ Rental ☐

Kitchen

Lineal feet of base cabinets 12'-0 Lineal Feet of upper cabinets 9'-6

Continuous Lineal feet of countertops 20'-0 Countertop Material Solid Surface

Sink width 32 Range/Oven width 30 Refrigerator cubic feet 26

Dishwasher width 24 Garbage Disposal? Yes ☐ No ☑

List other appliances provided _____

List Warranties on appliances (years): Range/Oven 2 Refrigerator 5 Dishwasher 1

Garbage Disposal ☐ Other _____

Bathrooms

Number of bathrooms _ Does at least one bathroom contain the following?

Toilet ☑ Bathtub ☑ Shower ☑ Sink ☑

Bathroom must contain a minimum of four square feet of storage. Describe how bathroom storage is being provided Base cabinetry at sink vanity and shelving over toilet

Closets and Storage Areas

Does each bedroom have a closet? Yes ☑ No ☐

Does each bedroom closet contain a shelf and rod? Yes ☑ No ☐

Bedroom closet width: bedroom 1 6'-0 bedroom 2 6'-2 bedroom 3 _____

Bedroom closet height: bedroom 1 9'-0 bedroom 2 9'-0 bedroom 3 _____

Does the entryway have a closet? Yes ☑ No ☐ If no, describe how adequate storage for coats, shoes/boots is being provided _____

Linen closet width: Linen closet 1 2'-6 Linen closet 2 _____

Additional storage square feet 93

Describe how additional storage requirement is being met Pantry / broom closet of 3.66 sf and separate storage room of 93 sf

Closet door type (doors not required on interior storage) bi-fold

Are all closets a minimum of 26 inches deep? Yes ☑ No ☐

Floor Coverings

Describe floor covering material:

Living room Vinyl Plank Bedroom(s) Vinyl Plank

Kitchen Vinyl Plank Bathroom(s) Ceramic Tile

Warranty for each flooring type Lifetime limited

Room Sizes and Shape

Provide Measurement from the narrowest part of the room; length x width.

Kitchen 13'-6 x 8'-2 Dining 8'-6 x 6'-0

Bedroom 1 12'-0 x 11'-8 Bedroom 2 12'-0 x 11'-4 Bedroom 3 _____

Functional Furniture Placement diagram attached? Yes ☑ No ☐

Windows/Noise Mitigation

Does each living area and bedroom have a window that can be opened? Yes ☑ No ☐

For units that share walls with other residential or non-residential spaces, please describe noise mitigation being provided. STC 56 double stud wall between units, gasketed doors @ entry and btwn units, triple-glazed windows,

What is the Sound Transmission Class (STC) rating on all windows? 40

Are blinds being provided? Yes ☑ No ☐ If yes, on which windows and what type? cellular horiz. blinds all windows

Laundry

Are washer/dryer hookups being provided (required in ownership units)? Yes ☑ No ☐

Heating and Hot Water

Warranty on furnace, boiler, or hot water heater (5 year minimum) NA

Size of hot water heater NA

Other Design Features

The following features are encouraged and may be used in the place of other requirements with approval from the Housing Department:

Describe any built in storage such as drawers under beds, stairs, etc. PANTRY / BROOM CABINET

Describe creative shelving

Describe laundry area SIDE BY SIDE WASHER DRYER SET INTO 4'-4" WIDE CLOSET W/ BI-FOLD DOORS. DOORS REMAIN IN OPEN POSITION WHEN UNITS ARE IN USE.

Describe extra storage for recreational equipment 93 SF STORAGE ROOM W/ DESIGNATED BICYCLE STORAGE

Describe extra cabinetry

Describe extra closets 1'-4" X 2'-9" FULL HT. PANTRY / BROOM CABINET W/ SHELVES 1'-0" O.C. IN PANTRY

Please attach additional pages if needed.

SECTION 5 – Application Materials

- DEVELOPMENT PLAN APPLICATION
- PREAPPLICATION CONFERENCE CHECKLIST
- DEEDS & LETTER OF AUTHORIZATION

Pre-Ap Comments – Completed (Revised 12/26/24)

P24-164 Pre-Application Conference Request
ADDRESS: 139 N Cache Street
OWNER: Episcopal Church in Jackson Hole, WY
APPLICANT: Jorgensen Associates, Inc.

12/26/2024
Scott Mohror, Brian Lenz (307) 733-3079

DATE OF SUBMITTAL: 10/18/2024
DATE OF MATERIALS: 10/16/2024
REVISION NO.: 00

The Engineering Division has reviewed your application for a **PRE-APPLICATION CONFERENCE REQUEST** submitted on and with application materials as dated above.

The following items need to be addressed with the Sketch and/or Development Plan application unless otherwise noted. The information provided should be commensurate with the level of application being made. For Sketch Plans the information should be preliminary and conceptual to show general consistency with the LDRs. For Development Plans the information should be detailed enough to show compliance with the LDRs and that the project is constructable. The information for Building Permits should be detailed for final construction documents.

PROJECT SPECIFIC COMMENTS

1. At least one of the proposed ADA parking spaces needs to be a Van Accessible space.
2. With the Building Permit application, provide pre-treatment for the elevator sump pumps effluent prior to entering the sewer system.
3. With the Building Permit application, provide documentation that the existing building has a 4” sanitary sewer service line to Glenwood Street has been inspected and is of sound integrity or will be replaced.
4. There is an existing 4” DIP water service off the 8” DIP water main under Cache Street. Existing plans shows a 2” water service tapped off the 4” DIP. Provide how the proposed building will be served along with an appropriately sized line.
5. PROW permits for use of the right-of-way will be issued through Town Engineering. Excavation in the right-of-way may require WYDOT and ToJ approval to issue a permit.
6. WYDOT requires structural supports for canopies be located outside of the right-of-way (Operating Policy 19-09 Part V.A.3). Revise canopy design or provide written documentation of approval from WYDOT for the proposed canopy columns.
7. Utility work in Cache Street right-of-way will require a WYDOT M-21 utility license for each utility and applicant will need to coordinate with the utility owner, Town of Jackson (ToJ) for water, to procure the license(s).

SUBMITTED

8. The existing parking spaces are typically 18'Lx9'w. Parking spaces shown on the plan sheet show car stops. The required length of a parking space with a car stop is measured 18' from the car stop to the end of the parking space. Verify with Planning.
9. The proposed rehabilitation of the existing parking lot will require storm runoff pre-treatment prior to entering ToJ storm system.
10. The proposed new pedestrian gateway structure will conflict with an existing streetlight and conduit. Provide design plans for the gateway structure along with plans for relocation of the streetlight.
11. The proposed concrete walk at the gateway will need to be evaluated and may include redesigning the existing sidewalk that crosses the parking lot entrance. Town preference is to provide continuous elevated grade across the parking lot entrance without dropping the sidewalk down. Driveway access should be squared off without radii and the north side of the access curb line should be bumped out to match the south side curb line. The current drainage in the flowline may have low points and should be assessed for reconstruction with the revisions to entrance.

The following is a general list of code and regulations typically reviewed by the Engineering Division. Some projects may be reviewed for items not on the list and the list does not supersede established codes or regulations. Future applications should to address these matters commensurate with the degree of detail required by the application being submitted.

ToJ CODE

1. A construction-staging narrative shall be submitted for review and approval with the Development Plan application.
2. Plans provided for submittal shall show all work to be completed within the Town's right-of-way.
3. Show all encroachments into the Town's right-of-way or easements. Encroachment agreements are required for encroachments of buildings, retaining walls, foundations, canopies, balconies, roofs, shoring, etc.
4. A demolition permit is required for each existing structure to be removed from the site. Water and sewer services to be abandoned for the project shall be abandoned at the main during the demolition phase of the project.

LAND DEVELOPMENT REGULATIONS

1. Development shall comply with the physical development standards for its zoning.

5.5 LANDSCAPING STANDARDS

1. Provide a plan that complies with the LDRs and addresses erosion control.

5.7 GRADING, EROSION CONTROL, AND STORMWATER

5.7.1 Grading Permit Required:

SUBMITTED

1. Provide information on how the application will comply with this section, including the Geotechnical Report.

5.7.2 Grading Standards:

2. Provide a grading plan that shows compliance with this section. Plan shall include existing and proposed site contours with elevation labels, spot elevations, high and low points, grade breaks. Provide easements for grading proposed on adjacent properties.

5.7.3 Erosion Control Standards:

3. Provide an erosion control plan that shows compliance with this section.

5.7.4 Stormwater Management Standards:

4. Provide an erosion control plan that shows compliance with this section.

6.2 PARKING AND LOADING STANDARDS

6.2.2 Required Parking and Loading:

1. Provide a plan that shows the proposed parking in compliance with this section. Include location and dimension of parking spaces, accessible spaces, including van accessible spaces, and bicycle parking. For uses that require deliveries, show the proposed loading facilities.

6.2.5 Off-Street Parking and Loading Design Standards:

2. Provide a parking plan in compliance with this section. Include surface materials and drainage plans, access and circulation, and snow storage.

6.4 OPERATIONAL STANDARDS

6.4.1 Outside Storage:

1. Provide a Construction Management Plan / Narrative, for any offsite storage address compliance with this section.

6.4.3 Noise:

2. Provide a statement to address compliance with this section.

6.4.4 Vibration:

3. Provide a statement to address compliance with this section.

7.2 SUBDIVISION STANDARDS

7.2.2 Standards Applicable to all Development

7.2.2.A Improvements:

1. Provide plans and specifications for roads, streets, alleys, sidewalks, and pathways including streetlight, signage, and markings.
2. Provide a sanitary sewer wastewater plan.
3. Provide a water supply plan.
4. Provide a storm drainage plan, basins, calculations, treatment method. Stormwater discharged to a public storm sewer or right of way requires treatment. Wyoming DEQ 5D2 permits are required for subsurface discharges.
5. Provide a plan for all other utilities, such as telephone, cable TV, electric, fiber, gas.
6. Provide a plan for permanent reference monuments, property corners, etc.

SUBMITTED

7. Permits are required prior to construction of development improvements.
8. All improvements shall be designed by a professional engineer licensed to do such work in the State of Wyoming.
9. The Town Council may require installation and construction of utilities, pavement and other land improvements in excess of subdivision design needs, to assure adequate service to future development areas.

7.6 TRANSPORTATION FACILITY STANDARDS

7.6.2 Access to Roads, Streets and Highways:

1. Provide a plan showing the point of access. Show compliance with the standards for access and justification for access to collector and arterial roads.

7.6.4 Street and Road Standards (section not used, for reference):

2. Provide a plan that generally complies with the Community Streets plan and Bicycle improvements plan. Include property lines, dimensions, radii, elevations, slopes, grade changes, etc.
3. For all pedestrian areas provide a plan that includes: dimensions, radii, elevations, slopes (running and cross slopes, not oblique slopes), ramp slopes, grade breaks, stair dimensions, handrails, guards, etc. showing compliance with ADA, IBC, and Town standards.
4. Design street frontages using existing road grades for control of sidewalk and buffer grades. Treat any buffer and sidewalk all as one plane, without grade breaks. Accommodate accessibility within the private property and not in the right-of-way.

7.7 – REQUIRED UTILITIES

7.7.2 Potable Water Supply:

1. Provide a water system analysis indicating the required domestic and fire flow demands. Identify impacts to or upgrade requirements for the existing distribution, supply, or treatment system.
2. Show compliance with state regulations, construction standards, connections for lots of record, provisions for system expansion, and fire protection. Provide information on planned metering and backflow prevention locations.
3. State whether the water system will be privately or publicly owned. Water services over 2-inch in diameter require engineering design.

7.7.3 Sanitary Sewer System:

1. Provide right-of-way or easements as required, 30 feet minimum width with 10 feet minimum to either side.
2. Provide a sanitary sewer analysis. Identify downstream impacts on existing sewers, lift stations, and treatment facilities.
3. Show compliance with state regulations, construction standards, maximum allowable infiltration, connections for lots of record, and provisions for system expansion.
4. State whether the sewer system will be privately or publicly owned.

SUBMITTED

7.7.5 Other Utilities:
Provide a plan for all other utilities, such as telephone, cable TV, electric, fiber, gas. All utilities shall be installed underground.
Provide right-of-way or easements as required. Show that private utilities can be located on private properties, e.g. transformers.

IBC CHAPTER 11 / ADA ACCESSIBILITY
Show compliance with accessibility regulations including but not limited to:

- 1104.1: At least one accessible route within the site shall be provided from public transportation stops, accessible parking, accessible passenger loading zones, and public streets or sidewalks to the accessible building entrance served.
- 1104.2: At least one *accessible* route shall connect accessible buildings, accessible facilities, accessible elements and accessible spaces that are on the same *site*.
- 1104.5: Accessible routes shall coincide with or be located in the same area as a general circulation path. Where the circulation path is interior, the accessible route shall be interior. Where only one accessible route is provided, the accessible route shall not pass through kitchens, storage rooms, restrooms, closets or similar spaces.

SUBMITTED

JACKSON/TETON COUNTY AFFORDABLE HOUSING

MEMORANDUM

To: Katelyn Page
Town of Jackson Planning and Building

From: Kristi Malone
Jackson/Teton County Housing Department

Re: Housing Department Review of Pre-Application Request (P24-164) for Proposed Mixed-Use Retail/Residential/Office at St. John's Episcopal Church (139 N Cache)

Date: December 30, 2024

The applicant is proposing redevelopment of the existing Browse & Buy store with construction of approximately 21,895sf of mixed-use space including two residential units. This Pre-Application conference is in preparation for submittal of a Development Plan application.

Affordable Workforce Housing Standards:
The Town of Jackson Land Development Regulations (LDRs) include Affordable Workforce Housing Standards in Division 6.3. The purpose of these standards is to ensure that affordable workforce housing is provided to the local workforce by employee-generating development proportionate to the need for affordable workforce housing that development creates. To confirm compliance with the standards of this Division, a sufficient application for any employee-generating development must include a Housing Mitigation Plan. The contents of a Housing Mitigation Plan, described below, are listed in Section 6.3.6 of the LDRs or you may use the checklist here.

Applicability. Identify any "credits" the property may carry from past or present uses in existence on the site. On-site uses and square footage meeting the "Existence" definition should be entered into the Town's Housing Calculator under "Step 2: Existing Development." Next, account for proposed floor area and uses that are exempt from housing mitigation, like residential units that are part of the 2:1 Bonus, non-habitable or shared circulation space, and units to be restricted for required mitigation. These should be entered into the Town's Housing Calculator under "Step 3: Proposed Development."

Amount Required. Once **all** existing and proposed square footage is entered into the Town's Housing Calculator, an Affordable Workforce Housing requirement will be generated as either number of housing units (> or = 1 unit) or a fee-in-lieu (<1 unit). Include a copy of your completed calculator in the application.

Tabulation of unit types. The LDRs establish an allocation schedule for affordability and size (number of bedrooms) for each housing mitigation unit required. The first required mitigation unit is always a 2-bedroom 80-120% Median Family Income (MFI) unit and the second is always a studio or 1-bedroom <50% MFI unit. Information on income ranges and maximum rental rates is available at the Housing Department's website. Any variation proposed by the applicant must be approved by the Housing Director per the standards of an Administrative Adjustment and LDR Sec. 6.3.4.B.2.a and 6.3.4.C.1.

Proposed method of provision. The priority method for meeting Affordable Workforce Housing requirements is construction of mitigation units on or off-site. Use of lower priority methods (conveyance of land, using a banked unit, restriction of an existing unit, or payment of an in-lieu fee) must be justified by demonstrating impracticality of higher priority methods. The mitigation requirement must be met before the employee-generating development can be used (before C/O is issued), unless an alternative timeline is approved for a phased construction plan.

Livability Standards & Restrictions: All mitigation units must be designed to meet the Livability Standards of the Housing Department Rules & Regulations and be permanently deed restricted with the applicable template deed restriction approved by the Town Council at the time of recordation.

Accessory Residential Unit Use Standards:
In the Town Square-2 zone, no primary residential uses are allowed, so these two residential units will be categorized as Accessory Residential Units (ARUs). At a minimum, ARUs accessory to a non-residential use must be deed restricted as Workforce Rental units. However, the applicant may choose to further deed restrict the two on-site ARUs as Affordable to meet housing mitigation standards, as discussed above. In the pre-app, we learned that the applicant is exploring the possibility of permitting a unit as short-term rental/lodging since temporary housing needs are part of the organization's programming. Deed-restricted Affordable or Workforce Housing units have a minimum rental period of 6 months.

Process & Conditions of Approval:
The following conditions of approval are typically included in review of development applications that require housing mitigation and/or use a housing incentive tool. They are included here for reference.

1. **Required components of livability.** Restricted housing units shall include, at a minimum, the components of Livability Standards required by Sec. 3-3 of the Housing Department Rules and Regulations.
   Prior to applicant's submittal of Building Permit,
   - ☐ the Livability Standards Questionnaire (https://www.tetoncountywy.gov/DocumentCenter/View/15860/Livability-Standards-Questionnaire-Interactive) shall be completed for each unit and submitted to the Housing Department for review along with floor plans that include dimensions and a functional furniture placement diagram.

- ☐ a letter from the Housing Department will be issued to the applicant stating whether the unit(s) are compliant with Livability Standards or whether there are required changes.
- ☐ a Livability Standards Letter from the Housing Department that confirms approval is required to be included in any Building Permit application.

Prior to issuance of Certificate of Occupancy,

- ☐ the Housing Department shall inspect the site to ensure restricted units were built to approved Livability Standards.

2. **Deed Restriction.** To ensure continued compliance with the standards of the Town of Jackson Land Development Regulations and the Housing Department Rules & Regulations, required dwelling units shall be subject to a deed restriction for housing, in perpetuity, in a form established and approved by the Housing Department.

Prior to issuance of Certificate of Occupancy,

- ☐ a special restriction drafted by the Housing Department using the applicable approved Restriction Template will be recorded on the unit/property. The applicant will be responsible for payment of recording fees**.**
- ☐ the leasing agent/realtor/property manager or person managing residents shall attend a Compliance Conference with the Housing Department to learn how Workforce and Affordable households are qualified for residency in restricted units.

Thank you for the opportunity to join the pre-application meeting. Please contact me with any questions.

PRE-APPLICATION CONFERENCE SUMMARY

Planning & Development Department
Planning Division

150 E Pearl Ave. | ph: (307) 733-0440
P.O. Box 687 | fax: (307) 734-3563
Jackson, WY 83001 | www.townofjackson.com

This Summary will be prepared by Planning Staff. The applicant, or the applicant's agent, shall receive a copy of this summary for their reference in submitting a sufficient application.

Staff may request additional materials during review as needed to determine compliance with the LDRs.

PRE-APPLICATION MEETING BASICS.

PAP#: P24-164

Date of Conference: 12/13/2024

Planning Staff: Katelyn Page

PROJECT.

Name/Description: St. John's Browse N Buy

Physical Address: 139 N Cache Street / 170 N Glenwood St

Lot, Subdivision: Lots 1-7 & 14-20, Block 7, Jackson Original Townsite PIDN: 22-41-16-28-4-09-005

Zoning District(s): Structure: Town Square – 2 (TS-2)
Parking: Downtown Core-2 (DC-2)

Overlay(s): Lodging Overlay & Downtown Design Overlay-2 (Western Character)

STAKEHOLDERS.

Applicant: Jorgensen Assoc. (Mia Dunbar-Irwin)

Owner: Episcopal Church of Jackson Hole, WY

Agent:

REQUIRED APPLICATIONS. (See B.12, C.1, D.4 of applicable zone in Article 2, 3 or 4) *This project will require the following applications:*

Application	Reason	Fee
Design Review Committee (DRC)	Required for physical development in the TS-2 zone. DRC is required for Development Plan.	$225
Development Plan (Sec. 2.2.17.B.9)	Required for buildings greater than 10,000 sf (both above and below grade habitable)	$3309
Fee Waiver Request	The applicant can request a fee waiver from the application fees. The fee waiver request should be done concurrently with Development Plan	n/a
Basic Use Permit	Required to establish or expand the retail/service/office/ ARU uses. Can be run concurrently with the Development Plan.	$662

Demolition Permit	Required to demolish the existing building.	TBD
Grading Pre-Application (Sec. 5.7.1.D)	Required if more than 3,000 sf of site area is disturbed. Two grading pre-applications may be required, one before the GEC permit & one before the building permit.	$199
Grading & Erosion Control Permit	Required if the applicant desires to do site and utility work only	TBD
Encroachment Agreement	Required for any physical encroachments into the right-of-way (ex: covered walkway)	n/a
Shoring Agreement	Required if soil nails are proposed in the right-of-way	TBD
Construction Management Plan	May require Town Council review and approval.	n/a
Crane Agreement	Required prior to building permit issuance if a crane is proposed for construction.	TBD
WYDOT Permits	Required for any physical encroachments into North Cache with is WYDOTs right-of-way	Check with WYDOT
Building Permit	Required for physical development	TBD
Sign Permit	Required for signage.	$99 per sign

MEETING ATTENDEES:

Name	Company	Phone/Email
Mia Dunbar-Irwin	Jorgensen Associates	mid@jorgeng.com
Arne Jorgensen	Hawtin Jorgensen Associates	ajorgensen@hawtinjorgensen.com
Rob French	Hawtin Jorgensen Associates	rfrench@hawtinjorgensen.com
Harrison Carter	Jorgensen Associates	hcarter@jorgeng.com
Brendan Schulte	Jorgensen Associates	bschulte@jorgeng.com
Joe Lovett	Jorgensen Associates	jlovett@jorgeng.com
Jimmy Bartz	St John Episcopal Church	jimmy@stjohnsjackson.org
Katelyn Page	Town of Jackson, Planning	307-734-3493
Scott Mohor	Town of Jackson, Engineering	307-733-30779 x1413
Brian Lenz	Town of Jackson, Engineering	307-733-3079 x1410

TIMELINES. *This table is intended to provide general information regarding the review process and timing of decisions. See Article 8 for a complete explanation of the review process.*

The following timelines are generally applicable to decisions by the DRC, Planning Commission, and Council.

Application Types:	Sufficiency	DRC	Planning Commission (PC)/ Board of Adjustment (BOA)	Town Council
STEP #1 • Design Review Committee (DRC)	NA	DRC meets 2nd Wednesday of each month. Applications due 3 Mondays prior to DRC meeting. First 4 DRC items are placed on that months agenda	NA	NA
STEP #2 • Development Plan • Fee Waiver Request	Within 14 days of Submittal	NA	Hearing within 90 days of Sufficiency No PC review of fee waiver request	Hearing within 60 days of PC decision Fee waiver reviewed by Council alongside Dev. Plan
STEP #3 • Encroachment Agreement • Construction Management Plan	Within 14 days of Submittal		NA	Typically 30-45 days after submittal Canopy agreement Recorded prior to C/O

The following timelines are generally applicable to decision by the Planning Director, and/or Building Official

Application Types:	Sufficiency	Decision
• Grading Pre-application (occurs after Development Plan approval)	NA	Within 30-45 days of submittal
• Demolition Permit (can occur at any time)	Within 14 days of Submittal	TCHPB within 30 days. Possible 90-day stay on issuance.
• Basic Use Permit (run concurrently with Development Plan)	Within 14 days of Submittal	Run concurrently with Development Plan Response within 45 days of sufficiency
• WYDOT Permits (occurs prior to building permit submittal)	Please reach out to WYDOT	Please reach out to WYDOT
• Building Permit (last step)	NA	1st round review – 60 days 2nd round review – 30 days

GENERAL INFORMATION.

____✓__*Required, If Checked.*

_____*If not checked, review requirement with a Staff member to determine if necessary for your application.*

-Requirement		Notes
✓	**Planning Permit Application.** The application should list all pertinent permits (use, physical development, interpretation, relief from the LDRs, Development Option/Subdivisions, Amendments to the LDRs) for which you are applying.	Required to be filled out and signed.
✓	**Notarized Letter of Authorization.** See **Section 8.2.4.A** for requirements. A template is established in the Administrative Manual.	Required if the applicant/representative is not the owner of the property.
✓	**Application Fees.** Fees are cumulative. Applications for multiple types of permits, or for multiple permits of the same type, require multiple fees. See the currently adopted Fee Schedule in the Administrative Manual for more information.	Please see above.
N/A	**Review fees.** The applicant is responsible for paying any review fees and expenses from consulting services necessitated by the review of the application by the Town Surveyor, Town Engineer, Town Associate Engineer, Title Company and any other required consultant. Such fees shall be paid prior to approval of the permit.	
✓	**Mailed Notice fee.** See **Section 8.2.14.C.2** for notice requirements. If mailed notices are required, the applicant is responsible for paying for any mailing in excess of 25 notices.	Done by the Town Staff.
✓	**Other information needed.** All applications submitted to the Town of Jackson Planning Department must be submitted in digital format once the application is determined to be sufficient.	Please visit Jacksonwy.gov for the submittal requirements for each application.
✓	**Response to Submittal Checklist.** All applications require response to applicable review standards. For applications where a pre-application conference is required, applicable standards are identified below. If a pre-application conference is optional, see the submittal checklist for the relevant application type, established in the Administrative Manual.	Applications should include all info noted in Pre-app plus typical submittal requirements for that permit type.
N/A	**Title Report.** A title report, title certificate or record document guarantee prepared within the last six months that includes evidence of ownership and all encumbrances on the subject property. Copies of the documents referenced in the report should not be submitted unless requested by the planner during review.	
✓	**Narrative description of the proposed development.** Briefly describe the existing condition of the property and the proposed use, physical development, subdivision or development option for which you are seeking approval.	Please visit Jacksonwy.gov for the submittal requirements for each application. All findings for each applicant shall be made by the applicant.
✓	**Proposed Development Program.** Please use the attached template established in the Administrative Manual.	
✓	**Site Plan.** Please see the attached list of minimum standards for a site plan, established in the Administrative Manual.	Site plans shall be dimensioned and to scale.

✓	**Floor Plans.** Include floor plans for any existing buildings that will be occupied by a proposed use. If changes to existing buildings are proposed, indicate those on the floor plans.	Floors plans shall be dimensioned and to scale and show square footage of all interior spaces.
N/A	**Neighborhood Meeting Summary.** See **Section 8.2.3** for Neighborhood Meeting requirements.	Not required for Dev. Plan
✓	**Posted Notice.** See **Section 8.2.14.C.4** for Posted Notice requirements for all public hearings.	Required for public hearings
✓	**Digital Format.** All application submitted to the Town Planning Department must be submitted in digital format.	

Requirements listed under each Article will be checked if required for the application.

✓ *Required, If Checked.*

_____ *If not checked, this requirement is not applicable to your application.*

ARTICLE 2, COMPLETE NEIGHBORHOODS, ARTICLE 3, RURAL AREA ZONES, and ARTICLE 4, SPECIAL PURPOSE ZONES – (Public/Semi-Public & Park and Open Space zones only).

Applicable Zone: TS-2 (parking area DC-2) Applicable LDR Section: 2.2.17 (TS-2) and 2.2.15 (DC-2)

PHYSICAL DEVELOPMENT. *Please see Subsection B in applicable Zone District for specific standards.*

Requirement		**Notes**
✓	**Structure Location and Mass** (setbacks, height, FAR, etc.)	This information must be shown with the Dev Plan
✓	**Maximum Scale of Development** (individual building size)	The zone limits an individual building to 15,000 sf. (max habitable floor area above grade)
✓	**Design Review** (Design Guidelines and Design Review Committee)	Required for Development Plan
✓	**Site Development** (Driveway and Access limits)	
✓	**Landscaping** (see Div. 5.5 for more information)	Landscape plan required with Dev. Plan and Building permit submittal
✓	**Fencing** (see Sec. 5.1.2 for more information)	Show any proposed fencing
N/A	**Environmental Standards (see Div. 5.1 and 5.2 for more information)** • Natural Resource Buffers • Irrigation Ditch Setback • Natural Resource Overlay Standards	
✓	**Scenic Standards (see Div. 5.3 for more information)** • Exterior Lighting • Scenic Resource Overlay (SRO) Standards	A lighting plan is required with Building Permit. Should be considerably developed at Development Plan level. Show compliance with updated exterior lighting standards Sec. 5.3.1.

✓	**Natural Hazards to Avoid (see Div. 5.4 for more information)** • Steep Slopes • Areas of Unstable Soils • Fault Areas • Floodplains • Wildland Urban Interface	
✓	**Signs (see Div. 5.6 for more information)**	Signs are approved separately through a sign permit.
✓	**Grading, Erosion Control, Stormwater (see Div. 5.7 for more information)** • Grading • Erosion Control • Stormwater Management	

USE STANDARDS. *Please see Subsection C in applicable Zone District for specific standards.*

Requirement		Notes
✓	**Allowed Uses** (see Div. 6.1 for more information)	Include description of proposed uses and associated floor areas per use. Helpful to color code floor plans.
✓	**Parking** (see Div. 6.2 for more information)	Include parking calculation for all existing and proposed uses at the property. See parking credit notes below.
✓	**Employee Housing** (see Div. 6.3 for more information)	Include a housing mitigation plan with Development Plan submittal
✓	**Maximum Scale of Use**	1.83 FAR max in TS-2 zone with exemptions for deed restricted housing. Provide floor area breakdowns with Development plan submittal.
✓	**Operational Standards (see Div. 6.4 for more information)** • Outside Storage • Refuse and Recycling • Noise • Vibration • Electrical Disturbances • Fire and Explosive Hazards • Heat and Humidity • Radioactivity	Materials for enclosure shall match building design

SUBSECTION D, DEVELOPMENT OPTIONS. *Please provide the following information for the applicable zone.*

Requirement		Notes:
N/A	Allowed Subdivision and Development Options	
N/A	Subdivision and Development Option Permits	

ARTICLE 7, DEVELOPMENT OPTION AND SUBDIVISION STANDARDS APPLICABLE IN ALL ZONES.

Requirement		Notes
N/A	**Division 7.1, Development Option Standards**	
	7.1.3 Urban Cluster Development	
	7.1.4 Mobile Home Park	
N/A	**Division 7.2, Subdivision Standards**	
	7.2.2 Standards Applicable to all Subdivision	
	7.2.3 Land Division Standards	
	7.2.4 Condominium and Townhouse Subdivisions	
N/A	**Division 7.5, Development Exaction Standards**	
	7.5.2. Park Exactions	
	7.5.3. School Exactions	
✓	**Division 7.6, Transportation Facility Standards**	
	7.6.2 Access to Roads, Streets and Highways	
	7.6.3 Streets, Alleys, and Easements	
✓	**Division 7.7, Required Utilities**	
	7.7.2 Potable Water Supply	
	7.7.3 Sanitary Sewer Systems	
	7.7.4 Irrigation Ditch Systems and Design	
	7.7.5 Other Utilities	
	7.7.6 Fuel Storage Tank	
N/A	**Division 7.8, Workforce Housing Incentive Program**	

Department Review and Additional Comments:

Engineering Dept. (See attached PDF)

Building Dept.

- The structure must meet the most current adopted building codes of the Town of Jackson at the time of permitting.

Planning Dept.

- Staff confirms Sketch plan is only required if total habitable floor area exceeds 30,000sf.
- PRIOR to DRC Submittal – Please contact WYDOT Prior to DRC submittal to confirm they will allow canopy/balcony encroachment as part of the design.
- DRC – The DDO Western Character Design Guidelines will apply to this property in addition to the normal Design Guidelines.
- BYCICLE PARKING / EV CHARGING – Only triggered for all new and expanded uses that *generate off street parking*. If no additional off-street parking spaces are provided over what is existing on site, then Bicycle and EV standards are not "triggered". Staff recommend applicant consider EV and bicycle parking even if not required.
- CONSTRUCTION MGT PLAN – Proposed plan should be included with Development Plan submittal for staff (and Council) comment. This enables any updates/changes to be incorporated and finalized prior to submittal of building permit.
- SNOW STORAGE – demonstrate snow storage that complies with the minimum 2.5% storage requirement.

- BOARDWALK ON CACHE – Staff will want boardwalk as the sidewalk material.

- USES – In the narrative for the Development Plan, please provide details on how each use functions. For Browse N Buy, describe how pick up/drop off works. For the Food Cupboard and Recovery, please describe typical operations.

- SETBACKS: Side setback is 0' or 5'. The street setback requires a covered boardwalk which consists of a 13' setback measured from the back of the curb. From there, the building must be within 0' to 5'. Please see the Building Frontage and Pedestrian Frontage requirements below.

1. Town Square

Description		
In the Town Square Frontage, the main facade of the building is located at or near the public boardwalk, with at-grade entrances spaced at regular intervals. The Town Square Frontage is intended primarily for retail uses, and has glazing (windows and doors) at the sidewalk level.		
Story Height	(Sec. 9.4.13.)	
Ground story height (min/max)	11'/14'	A
Upper story height (min)	9'	B
Ground floor elevation (min-max)	0' - 3'	C
Transparency	(Sec. 9.4.14.)	
Ground story (min/max)	50%/75%	D
Upper story (min/max)	20%/35%	E
Blank Wall Area	(Sec. 9.4.15.)	
Blank wall area (max)	15'	F
Pedestrian Access	(Sec. 9.4.16.)	
Entrance facing street (max)	Required	G
Entrance spacing along street (max)	50'	H

1. Covered Walkway

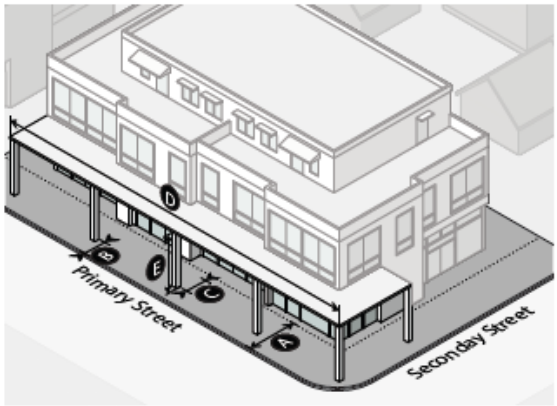

Description		
A covered walkway provides visual interest along the street edge, reduces the perceived mass of the building facade, and provides shelter from the rain, snow, and sun throughout the year. A covered walkway also reduces winter maintenance and improves pedestrian safety. A covered walkway is supported by posts or columns, or cantilevered from the building facade.		
Pedestrian Frontage Dimensions		
Total width from back of curb (min)	13'	A
Furnishing/planting area (min-max)	18" - 3'	B
Clear sidewalk width (min)	8'	C
Additional Specifications		
Gallery must be contiguous and extend for at least 75% of the street facade width. In TS-1, the gallery must be continuous and extend along all of the street facade width (100%).		D
Clear height above sidewalk (min)	9'	E
The furnishing/planting area shall be hardscape other than slab concrete (e.g. pavers, bricks)		
The building transition area shall be hardscape		
In TS-1, the floor surface (furnishing/planting area, clear sidewalk and building transition area) shall consist of a wooden boardwalk.		

- PARKING – After looking into the files for the overall church complex, there is a variance that approved 30 on-site spaces. Staff believes that the 30 on-site spaces were approved for not only the church but for the Browse N Buy and other

activities on site. This means that parking is and should still be viewed as "shared" amongst all uses. Moving forward, parking will need to be recalculated for the entire site to accommodate the existing uses and the proposed expansion of Browse N Buy. The good news is that the overall site has approximately 44 street parking credits, 49.84 historical parking credits, and 24 on-site spaces (shown on the proposed site plan). So in total, the church has roughly 117.84 parking spaces/credits to work with for all uses. If for some reason that isn't enough parking, the church can purchase parking through the Downtown Parking District. We can discuss this further at the pre-app meeting. Also, the LDRs allow 100% shared parking for deed-restricted units and ARUs. If shared parking is proposed, include this information in Dev. Plan narrative including number of shared spaces and hours for various uses have access to shared parking spaces.

FIRE Dept.

- Project must meet requirements of the current International Fire Code (IFC) including but not limited to the following:
- Construction Management Plan establishing a fire prevention program at the project site for all phases of construction submitted for review and approval before a building permit is issued.
- A fire permit is required for an automatic sprinkler system. A stamped set of plans shall be provided for review and approval prior to a permit being issued.
- A fire permit is required for a fire alarm system. A stamped set of plans shall be provided for review and approval prior to a permit being issued.
- Means of egress shall meet the requirements of the IFC, Chapter 10 as it applies to the multi-use proposal including number of exits, exit access, discharge, maximum exit access travel distance, signage, illumination and emergency electrical system in the event of a power supply failure.
- Portable fire extinguishers installed for the occupancy.
- Fire department access as required in the IFC, Chapter 5.

PLAN REVIEW COMMITTEE. *The Plan Review Committee consists of the following listed agencies. Planning Staff will transmit pertinent portions of the application to each agency.* ***Other agencies and individuals not checked off on this list may be added to the PRC if necessary.***

✓	Public Works/Town Engineer	✓	Police Department
✓	Building Official	✓	START Bus
✓	Town Attorney	✓	Jackson Hole Fire EMS
	Town Clerk	✓	Parks and Recreation Department
✓	Pathways Coordinator		Teton County School District #1
	Surveyor – for subdivision plat		Teton County Sheriff
	Title Company – for subdivision plat	✓	Teton Conservation District
✓	Teton County Housing Authority	✓	Wyoming Department of Game & Fish
	Teton County Weed & Pest		Wyoming Department of Transportation
	Teton County Planning		Wyoming Department of Environmental Quality
	Teton County Engineer		Army Corp of Engineers
	Teton County Assessor	✓	Lower Valley Energy
✓	Integrated Solid Waste and Recycling		U.S. National Park Service
	Teton County Clerk		U.S. Forest Service
	Teton County Public Health		U.S. Fish and Wildlife
	Teton County Scenic Preserve Trust		Other (Teton County Historic Preservation Board)

Town of Jackson
150 E Pearl Avenue
PO Box 1687, Jackson, WY 83001
P: (307)733-3932 F: (307)739-0919
www.jacksonwy.gov

Date:

LETTER OF AUTHORIZATION

NAMING APPLICANT AS OWNER'S AGENT

PRINT full name of property owner as listed on the deed when it is an individual OR print full name and title of President or Principal Officer when the owner listed on the deed is a corporation or an entity other than an individual: The Reverend James P. Bartz Title: Rector / President

Being duly sworn, deposes and says that The Episcopal Church in Jackson Hole is the owner in fee of the premises located at:
Name of legal property owner as listed on deed

Address of Premises: 170 Glenwood Jackson WY 83001

Legal Description:
Please attach additional sheet for additional addresses and legal descriptions

And, that the person named as follows: Name of Applicant/agent: Jorgensen c/o Mila Dunbar-Irwin

Mailing address of Applicant/agent: PO Box 9550 Jackson, WY 83002

Email address of Applicant/agent: mdi@jorgeng.com

Phone Number of Applicant/agent: 307-733-5150

Is authorized to act as property owner's agent and be the applicant for the application(s) checked below for a permit to perform the work specified is this(these) application(s) at the premises listed above:

☒ Development/Subdivision Plat Permit Application ☐ Building Permit Application

☐ Public Right of Way Permit ☐ Grading and Erosion Control Permit ☐ Business License Application

☐ Demolition Permit ☐ Home Occupation ☐ Other (describe)

Under penalty of perjury, the undersigned swears that the foregoing is true and, if signing on behalf of a corporation, partnership, limited liability company or other entity, the undersigned swears that this authorization is given with the appropriate approval of such entity, if required.

Property Owner Signature

Rector / President

Title if signed by officer, partner or member of corporation, LLC (secretary or corporate owner) partnership or other non-individual Owner

STATE OF Wyoming)
) SS.
COUNTY OF Lincoln)

ROBYN WELLS REED
Notary Public - State of Wyoming
Commission ID # 154127
My Commission Expires
January 05, 2028

The foregoing instrument was acknowledged before me by James Bartz this 21 day of October. WITNESS my hand and official seal.

Notary Public

My commission expires: January 05, 2028

P-B COMBINATION

This Quitcl[illegible]ed being recorded to show co[illegible] name of the Grantee

QUITCLAIM DEED

KNOW ALL MEN BY THESE PRESENTS, That The Episcopal Diocese of Wyoming, a Wyoming Corporation

grantor. of the County of Albany, **State of** Wyoming

for the consideration of Ten Dollars and Other Good and Valuable Consideration **DOLLARS**

in hand paid, the receipt whereof is hereby acknowledged, hereby CONVEY(S) and QUITCLAIM(S)

to The Episcopal Church in Jackson Hole, Wyoming a Wyoming Corporation

address of Grantee, P.O. Box 505

City, Jackson **County,** Teton **State of** Wyoming 83001

all interest in the following described real property, situate in the County of Teton

in the State of Wyoming, to wit: Lots 1 through 7 and Lots 14 through 20 of Block 7,

1.) Original Townsite, Jackson, Teton County, Wyoming, and any and all improvements thereon and rights therein.

2.) THAT parcel of land running north to south 350 feet and approximately 20 feet wide through the north to south center line of Block 7 of the Original Townsite of the Town of Jackson, Wyoming, being bounded on the east by Lots 1 through 7 of said Block 7 and bounded on the west by Lots 14 through 20 of said Block 7, being a former alley of the Town of Jackson, Wyoming vacated and deplatted by Ordinance No. 68 of the Town Council of the Town of Jackson, filed for record in the office of the County Clerk and Ex-Officio Recorder of Deeds June 8, 1959 and recorded in book 10 of Mixed Records, on page 131, which property, by said vacating and deplatting of such alley, became the property of the contiguous owner of said lots, the Trustees of Church Property of the Protestant Episcopal Church in Wyoming, a Wyoming corporation, and any and all improvements thereon and rights therein.

This quitclaim deed is being filed to correct those quitclaim deeds filed for record on January 23, 1976 in Book 45 of Photo, page 147 & 148 and also filed January 29, 1976 in Book 45 of Photo, page 208.

Hereby releasing and waiving all rights under and by virtue of the homestead exemption laws of the State of Wyoming.

Dated this 20th **day of** October, **19** 86

Recorded 12-10-1986 at 10:45 o'clock A M
In Book 183 of Photo Page 964
No. 269659 $4.00 pd
V. Jolynn Coonce County Clerk
by [illegible] Dep.

The Episcopal Diocese of Wyoming
a Wyoming Corporation

By: [illegible]
President of Corporation

By: [illegible]
Attested by Secretary

RECORDED
COMPARED
INDEXED
ABSTRACTED

State of Wyoming)
County of Albany)

The foregoing instrument was acknowledged before me by Bob G. Jones, & Gail K. Fauchier, **this** 17th **day of** November, **19** 86

Witness my hand and official seal.

Shirley Denkers
notary Title of officer

My Commission Expires: 23 January 1988

Notary Public · County of Albany · State of Wyoming · My Commission Expires Jan. 23, 1988

First Wyoming Bank N A Jackson Hole

JORGENSEN

PO Box 9550 | 1315 HWY 89 S., Ste. 201
Jackson, WY 83002
PH: 307.733.5150
www.jorgeng.com

May 27, 2025

Katelyn Page
Town of Jackson Planning & Building
200 S Willow St
Jackson WY 83001

RE: Development Plan Application Response to Comments and Resubmittal for the Browse N' Buy Remodel

We are in receipt of Development Plan Review Comments from the Town of Jackson dated May 7, 2025. A few of these were specifically mentioned as needing to be addressed prior to scheduling for Planning Commission. Those have been addressed in this narrative and in the resubmittal materials contained herein and the rest of the comments will be addressed as the DEV process continues.

Engineering comments have also been addressed and are attached.

Planning Department Comments – **May 7, 2025**

- *Verify existing total habitable floor area on the entire campus property. Applicant narrative indicates proposed expansion of greater than 20 percent of its total habitable floor area or use on a site but provides no existing floor area figures. Thus, staff is unable to verify whether or not the amount of proposed floor area increase triggers compliance with LDR Sec. 1.9.2.B.5 (Required Compliance for Non-Building Nonconformities). This determination will impact below comments regarding parking facility.*

  Action required - Prior to Planning Commission review, revise submittal to confirm total existing habitable floor area on the campus property. This includes all habitable floor area on the property including basements and the existing Browse n Buy structure. Staff notes that floor area required to be deed restricted by LDR Sec. 6.3.3 or voluntarily done so under Sec. 7.8.3 (Deed Restricted Housing Exemption) is exempt from counting toward the 20% threshold amount of Sec. 1.9.2.B.5.

  Existing floor area has been added to the DEV narrative including the percent change calculation. Basements are included and deed restricted ARUs are not.

- *Planset inconsistencies - Revise civil and arch. site plans for consistency across disciplines. For example, A1.2 and C2.0 show different plan for elements including, but not limited to, curb location, parking facility, and transformer location. Additionally, A1.3 appears to reference a civil sheet but does not provide a page reference. Revise all planset for consistency. Additionally, DRC proposal and arch. plan A1.3 include wall and piers and pedestrian gateway along portion of the western frontage which civil plans do not reflect yet arch. plan note seem to defer to civil plans for such site design aspects.*

  Action required - Prior to Planning Commission review, revise submittal for consistency across disciplines/plan pages.

  Planset has been revised so linework and page numbers are consistent. See A1.3 for dimensions of site wall. It is also shown on C2.0.

- *Clarify design intent of parking facility Narrative (pg. 9) states existing parking is nonconforming but states applicant is hopeful that the TOJ will find an avenue for approval that allows the existing (nonconforming) parking to remain unchanged. However, in discussion with applicant team, it is staffs understanding that the applicant intends to provide a compliant parking facility as part of Development Plan.*

  Action required - Prior to Planning Commission review, revise submittal to clarify and update application for consistency of proposal. Also please list all LDR standards that the project currently does not comply.
  Sign permit note- No signage has been reviewed as part of the development plan submittal. All signage shall be reviewed and permitted under a required sign permit submittal.

  Narrative has been revised for clarification that this submittal contains a compliant parking facility. There are no standards with which the project does not currently comply. Signage will be addressed via sign permits at a future date.

- *Setback planes Staff notes that per Rules of Measurement 9.4.8 A setback is a measure of the shortest horizontal distance between a physical development or use and the feature from which it is being set back. A setback extends vertically above and below ground. Thus, the setback applies equally to all floors above and below the ground*.

  Noted.

- *Lighting - Final lighting plan submitted with building permit shall comply with LDR Sec. 5.3.1 (Exterior Lighting Standards)*

  Noted.

- *Lot Standards*
  2.2.17.B.1 Lot Standards - Building setback Primary Street (upper story front setback). While ground level meets necessary setback range of 0-5(min.-max.) the upper story building plane is shown as encroaching into the required building setback. Setback applies to the entire vertical plane. Please reference rules of measurement LDR Sec. 9.4.8.

  Action required - Prior to Planning Commission
  review, revise submittal so that all stories meet primary building setback of 0-5(min.-max) as measured from back of pedestrian frontage.

  Submittal has been revised to show compliance with the setback extending the entire vertical height of the building. See A2.4, A3.1, A3.2 and A4.1.

- *2.2.17.B.1 Lot Standards - Building setback (side interior south) Revise plans to meet side interior building setback of 0or 5(min). Applicants LDR Compliance table states the proposed structure is 0 from side interior property line. However, plans page A1.3 shows (hatched portion of) structure at 4 property line then Foundation plan page A2.2 shows 1 dimension to property line. Based on staff measurement, it appears there is approx. 10 between above grade structure to property line. Additionally, it is unclear on plans if dimensions are to foundation or structure above ground and unclear what hatching on A1.3 represents. Staff note (joint/fin) It appears neighboring structure at 135 N CACHE STREET was approved to be constructed at the 0 side setback and that the foundation appears to meet this 0 setback but that the building wall is setback 3 or 4 inches from the outside of the foundation wall in some areas. The intent of the 0 or 5 (min) setback is to avoid awkward or potentially hazardous narrow gaps between structures. Staff may require that a fin or joint be constructed to connect these structures and avoid such gaps.*

Action required - Prior to Planning Commission
review, revise for clarity and compliance by showing compliant side setback both above and below grade. If the applicant believes that it cannot meet the 0 or 5 (Min) side setback, or that this standard is unjustified, it should submit an Administrative Adjustment (per LDR Sec. 8.8.2) which may be used to adjust structure setbacks up to 20% (in this case up to 1). This application must provide compelling reasons, supported by relevant evidence, to support a different setback. Presumably, any compelling argument for a different setback here would effectively create a new Town-wide interpretation of the 0 setback standard. Staff notes that the onus to justify the need for an Administrative Adjustment falls on the applicant.

Submittal has been revised to show 0' setback from the property line. See C2.1, A2.2, A2.3, A2.4 and A3.1.

- *2.2.15.B.1 Lot Standards Fencing and structure setback (follow DC-2 standards on N. Glenwood St. side). Partial Site plan A1.3 references wall and piers and pedestrian gateway structure along portion of the western frontage but does not provide details on dimension or height. Fencing/piers shall meet fencing height and setbacks and pedestrian gateway structure may instead comply with building setback in DC-2 zone (thus may exceed fencing height max). Current plans do not provide dimensions, setbacks, height, or other design details. Additionally, these elements are not referenced in applicants LDR Compliance table.*

  Action required - Prior to Planning Commission review, revise site plan to confirm these elements meet setback and height allowances in the DC-2 zone. Update across all planset disciplines for clarity and compliance. Setbacks are measured from the back of the pedestrian frontage along N. Glenwood.

  Submittal has been revised to show site wall with setbacks (C2.0). It is not a fence. More details will be provided at building permit and dimensions are shown on A1.3.

- Bulk Standards
  Building height Provide dimension for height to stair access and clerestory. Should those elements exceed 42 just confirm compliance with allowed overruns per LDR Sec. 9.4.9.C (Building Height Exceptions).

  Action required - Prior to Planning Commission review, revise for clarity and compliance. Show height dimension on plans for the tallest portion of structure, not simply the west and east facade.

  Building elements comply with relevant standards. These are shown on A3.1 on the east and north elevations. Roof stair bulkhead height is shown and stair clerestory height is shown on A3.1 east elevation. Building height is also shown on A4.1 building section.

- Form Standards
  Ground floor transparency (Town Square Building Frontage Type) It appears ground floor transparency does not meet required min 50%. Staff estimates it closer to 40%. See calculation methodology Sec. 9.4.14 (Transparency). Additionally, in conversation with applicant, the design of the eastern facade has been updated for DRC review after Development Plan submission thus does not reflect most updated facade design.

  Action required Prior to Planning Commission Review, provide any updated plans (i.e. changes for DRC mentioned) and updated transparency calculation and confirm compliance with Ground floor transparency requirement in Sec. 2.2.1.D.1.

  Ground floor transparency has been updated in the plan sheet and calculation is in the updated LDR table included with this submittal. It complies with Section 2.2.1.D.1. See A2.3 first floor plan, A3.1 east elevation. Calculation has been added to sheet A3.1.

- Use Standards
  On-site parking required Only residential uses require on-site parking to be provided. 1/DU for ARUs (Apartment use not permitted in TS-2 zone). Parking existing Staff confirms property includes 49.84 spaces as part of Downtown Parking study. Applicant states 44 on-street parking spaces exist. Based on the extent of parking facility and setback comments that may require project redesign, final parking calculation will be determined upon submittal of revised plans prior to Planning Commission review. Housing note (allowed uses) Applicant proposes Apartment use which is not permitted in the TS-2 zone. Revise application to propose ARU (or consider short term rental use). See Dept. review comments from the Jackson Teton Co. Housing Authority.

  Action Required - Prior to Planning Commission review, revise application including narrative, housing mitigation calculator and mitigation plan, to reflect allowed use of ARU.

  Narrative and calculators have been revised to show two affordable, deed-restricted ARUs.

- *Housing calculator Housing calculator provided does not include all floor area proposed in the new development. For example, floor area of one residential use is left blank and floor area does not sum to the proposed amount referenced on plans/narrative.*

  Action Required - Revise housing calculator to include all floor area including all floor area including residential floor area. Please defer to Housing Department comments of Development Plan and reach out to that dept for assistance with calculations.

  Housing calculator has been revised and updated tables are in the narrative.

- Parking Facility
  Parking facility conformity See floor area note above regarding verification of triggering LDR Sec. 1.9.2.B.5. Should the proposed development indeed represent an addition of greater than 20% of total existing habitable floor area, applicant shall provide a parking facility compliant with LDR Sec. 6.2.4.D (Parking Facility Dimensions). Currently proposed parking facility does not provide a compliant design. o Drive aisle width All portions of drive aisle width must meet 24min width. Eastern portion of parking facility where spaces are across from transformer and dumpster enclosures is not dimensioned and does not appear to meet 24min width. Staff estimates it at approx. 20-21. o Over Hang With Wheel Stop. Current plans show 18 spaces with wheel overhangs on adjacent walkway. This is only permitted provided that an overhang shall not reduce the width of an adjacent walkway to less than four feet in width for areas that pathways are required for ADA path. It appears adjacent paths are reduced to be approx. 3.5 on current plans and it is unclear if those pathways are required for ADA access to proposed or existing structures. If use of 18 spaces is proposed, plans must also show wheel stop provided. Additionally, staff notes site plan inconsistencies between arch. and civil site plans. For example, curb location in parking setback area is inconsistent across plans. Staff note Again, only parking spaces for residential uses are required to be provided on-site. The applicant may consider options to provide a compliant parking facility that further reduces the amount of vehicle parking.

  Action Required - Prior to Planning Commission review, applicant shall revise parking facility design to comply with LDR Sec. 6.2.5.D (Parking Facility Dimensions) if triggered by the 20% expansion requirement in LDR Sec. 1.9.2.B.5. Parking facility shall be fully, not partially, dimensioned.

  Parking facility has been labeled to show compliance with current LDRs as the 20% expansion requirement is in effect. (C2.0)

- *Snow Storage Revise plans to show snow storage location in area other than within the existing parking facility (LDR Sec. 6.2.4.C Snow Storage Standards). Snow Storage shall accommodate snow removed from the parking, loading, and drive aisles rather than show within them.*

  Snow storage is shown on the planset. (C2.0)

  List of changes to Architectural Sheets:

- Sheet A1.1 "overall site plan/existing conditions site plan" is included because it now has the sheet number that matches the cover page.
- Sheet A1.3 partial site plan- misc. updates as described above
- Sheet A2.1 foundation plan included only because the sheet number has been corrected from A2.2. No other changes.
- Sheet A2.2 Basement- position in relation to side setback updated to zero. Area tabulation updated to reflect reduced second floor.
- Sheet A2.3 First floor- position in relation to side setback updated to zero. Fenestration at Cache reworked. Setback at ped frontage dimensions clarified.
- Sheet A2.4 Second Floor- overhanging portion pulled back to alignment with first floor. Position in relation to side setback updated to zero. Fenestration at Cache elevation modified.
- Sheet A3.1 - as described above. Also, proposed signage at Cache St balcony has been more accurately depicted.
- Sheet A3.2 - second floor overhanging portion pulled back to alignment with first floor. Dimension and notes added clarifying balcony encroachment and clearance from back of curb.
- Sheet A3.3 - Glenwood Ave wall and pedestrian entry element have been updated.
- Sheet A4.1 - Second floor overhang has been pulled back to alignment with first floor. Dimension and notes clarifying balcony encroachment, pedestrian frontage setback, and balcony setback from back of curb, have been added.

JORGENSEN

PO Box 9550 | 1315 HWY 89 S., Ste. 201
Jackson, WY 83002
PH: 307.733.5150
www.jorgeng.com

LDR COMPLIANCE

Lots 1-7 & 14-20, Blk. 7, Jackson Original Townsite
139 N Cache St & 170 N Glenwood St
Jackson, WY 83001

General	Source	Notes
Zoning District	Teton County GIS	ToJ - Downtown Core-2, ToJ - Town Square-2
PIDN	Teton County GIS	22-41-16-28-4-09-005
Gross Site Area (GSA)	Teton County GIS	2.4 ac - **104,544 SF**
LSR (Min)	ToJ LDR Section 2.2.17.B.1.	NA
FAR (Max)	ToJ LDR Section 2.2.17.B.2.	GSA (1.83) sf (105,544)(1.83) = **193,146 sf**

2.2.17. TS-2: Town Square – 2

Town of Jackson Applicable LDRs

*This lot is split-zoned Town Square – 2 and Downtown Core – 2. This table refers to the standards for the Town Square – 2 zone except when marked with an asterisk, in which case it refers to the standards for the Downtown Core – 2 zone.

1. Lot Standards				
Building Setbacks (Sec. 9.4.8.)				
General	**Source**	**Requirement**	**Proposed**	**Complies**
Primary street setback range (min-max)	ToJ LDR Section 2.2.17.B.1.	0' - 5'	0' - 5'	Yes
Secondary street setback range (min-max)	ToJ LDR Section 2.2.17.B.1.	0' - 5'	0' - 5'	Yes
Side interior (min)	ToJ LDR Section 2.2.17.B.1.	0' or 5'	0'	Yes
Rear (min)	ToJ LDR Section 2.2.17.B.1.	0' or 5'		
Abutting protected zone (min)	ToJ LDR Section 2.2.17.B.1.	10'	Complies	Yes
Landscaping (Div. 5.5.)				
Landscape surface ratio (min)	ToJ LDR Section 2.2.17.B.1.	NA		

Plant units (min)	ToJ LDR Section 2.2.17.B.1.	NA		
Fencing				
Height in any street or side yard (max)	ToJ LDR Section 2.2.17.B.1.	Not allowed		
Height in rear yard (max)	ToJ LDR Section 2.2.17.B.1.	6'		
Setback from pedestrian frontage	ToJ LDR Section 2.2.17.B.1.	Not allowed		
Setback from side or rear lot line (min)	ToJ LDR Section 2.2.17.B.1.	0'		
Parking Setbacks (Sec. 9.4.8.)				
Primary street, above ground (min)	ToJ LDR Section 2.2.17.B.1.	30'		
Secondary street, surface parking (min)	ToJ LDR Section 2.2.17.B.1.	30'	30'	Yes
Secondary street, tuck under, enclosed, or structured parking screened by building (min)	ToJ LDR Section 2.2.17.B.1.	0'		
Access				
*Curb cut width (max)	ToJ LDR Section 2.2.15.B.1.	*24'	21'	Yes
2. Bulk Standards				
Street Façade (Sec. 9.4.11.)				
Width of ground and 2nd story in primary street setback range • % of lot width (min) • *Length from street corner (min)	ToJ LDR Section 2.2.17.B.2.	80% *30'	1st Floor: 56'-3" (@ conc base - 56'-0" @ f.o. siding) of 66'-5" lot width = 85% 2nd Floor: 56'-0" of 66'-5" lot width = 84% NA	Yes
Width of ground and 2nd story in secondary street setback range • % of lot width (min) • *Length from street corner (min)	ToJ LDR Section 2.2.17.B.2.	80% *30'	1st Floor: NA 2nd Floor: NA NA	Yes

Building Height (Sec. 9.4.9.)				
Height (max)	ToJ LDR Section 2.2.17.B.2.	42'	38'	Yes
Stories (max)	ToJ LDR Section 2.2.17.B.2.	3	2	Yes
Height (min) in any street setback range	ToJ LDR Section 2.2.17.B.2.	16'	35'	Yes
Building Stepback (Sec. 9.4.12.)				
Stepback for any 3rd story street façade or façade over 30' (min)	ToJ LDR Section 2.2.17.B.2.	20'	NA	Yes
Encroachment in stepback (max % of overall façade width)	ToJ LDR Section 2.2.17.B.2.	40%	Primary: NA Secondary: NA	Yes
A building with only residential use that has at least 4 units is exempt from the stepback requirement	ToJ LDR Section 2.2.17.B.2.	NA		
Scale of Development				
Floor area ratio (FAR) (max) (E.3.)	ToJ LDR Section 2.2.17.B.2.	1.83 *1.3	193,146 sf	Yes
Deed restricted housing exemption (Sec. 7.8.3.)	ToJ LDR Section 2.2.17.B.2.	See Sec. 7.8.3.	Complies	Yes
Workforce housing floor area bonus (Sec. 7.8.4.)	ToJ LDR Section 2.2.17.B.2.	See Sec. 7.8.4.		
Single building size (max)	ToJ LDR Section 2.2.17.B.2.	15,000 sf	14,633 sf	Yes
3. Form Standards				
Pedestrian Frontage				
Covered walkway	ToJ LDR Section 2.2.17.B.3.	See Sec. 2.2.1.C.1.	Boardwalk, 13'-0" pedestrian width, no columns	Yes

Building Frontage				
Town Square	ToJ LDR Section 2.2.17.B.3. 2.2.1.D.1.	Story Height: Ground story: 14' max Upper story: 9' min Ground floor elev: 0'-3' Transparency (min/max): Ground story: 50/75% Upper story: 20/35% Blank Wall Area (max): Pedestrian Access (max): Primary entrance: req. Entrance spacing: 50'	Story Height: 13'-11 3/8" Transparency: 52.5% 32% Complies Pedestrian Access: Complies	Yes
Residential	ToJ LDR Section 2.2.17.B.3. 2.2.1.D.4.	Story Height: Ground story: 9' min Upper story: 9' min Ground floor elev: 0'-5' Transparency (min, %): Ground story, prim: 20 Ground story, sec: 20 Upper stories: 20 Blank Wall Area (max): Primary: 35' Secondary: 50' Pedestrian Access (max): Primary entrance: req. for each ground floor unit Entrance spacing: n/a		
Lodging	ToJ LDR Section 2.2.17.B.3. 2.2.1.D.5.	Story Height: Ground story: 12' min Upper story: 7'6" min Ground floor elev: 0'-5' Transparency (min, %): Ground story, prim: 40 Ground story, sec: 20 Upper stories: 20 Blank Wall Area (max): Primary: 35' Secondary: 50' Pedestrian Access (max): Primary entrance: req. Entrance spacing: n/a		

Parking Type Options				
On-street parking	ToJ LDR Section 2.2.17.B.3.	See Sec. 2.2.1.E.1.	Yes	Yes
Surface parking	ToJ LDR Section 2.2.17.B.3.	See Sec. 2.2.1.E.2.	Yes	Yes
Tuck-under parking	ToJ LDR Section 2.2.17.B.3.	See Sec. 2.2.1.E.4.		
Enclosed parking	ToJ LDR Section 2.2.17.B.3.	See Sec. 2.2.1.E.3.		
Structured parking	ToJ LDR Section 2.2.17.B.3.	See Sec. 2.2.1.E.5.		
Underground parking	ToJ LDR Section 2.2.17.B.3.	See Sec. 2.2.1.E.6.		
4. Environmental Standards				
Natural Resource Setback (min) (Sec. 5.1.1.)				
Cache Creek south of Cache Creek Dr.	ToJ LDR Section 2.2.17.B.4.	20'		
Flat Creek north of Hansen	ToJ LDR Section 2.2.17.B.4.	25'		
Flat Creek south of Hansen	ToJ LDR Section 2.2.17.B.4.	50'		
Wetland	ToJ LDR Section 2.2.17.B.4.	30'		
Irrigation Ditch Setback (min) (Sec. 7.7.4.D.)				
Irrigation ditch	ToJ LDR Section 2.2.17.B.4.	15'		
5. Scenic Standards				
Exterior Lighting (Sec 5.3.1.)				
Light trespass is prohibited	ToJ LDR Section 2.2.17.B.5.			Yes
All lights over 600 lumen shall be fully shieled	ToJ LDR Section 2.2.17.B.5.			Yes
Max lumens per sf of site development	ToJ LDR Section 2.2.17.B.5.	3	0.9	Yes

Lumens per site (max)	ToJ LDR Section 2.2.17.B.5.		18,000	Yes
All fixtures		100,000	18,000	Yes
Unshielded fixtures		5,500	0	Yes
Light color	ToJ LDR Section 2.2.17.B.5.	≤ 3,000 Kelvin	Complies	Yes
Scenic Resource Overlay (SRO) (Sec. 5.3.2.)				
6. Natural Hazards to Avoid				
Steep Slopes (Sec. 5.4.1.)				
Development prohibited	ToJ LDR Section 2.2.17.B.6.	Slopes > 25%		
Hillside CUP required	ToJ LDR Section 2.2.17.B.6.	Parcel with average cross-slope ≥ 10%		
Areas of Unstable Soils (Sec. 5.4.2.)				
Fault Area (Sec. 5.4.3.)				
Floodplains (Sec. 5.4.4.)				
Wildland Urban Interface (Sec. 5.4.5.)				
7. Signs (nonresidential) (Div. 5.6.)				
Number of signs (max)	ToJ LDR Section 2.2.17.B.7.	3 per business per street	Complies	Yes
Background color	ToJ LDR Section 2.2.17.B.7.	No white or yellow	Complies	Yes
Sign Area				
Total sign area (max)	ToJ LDR Section 2.2.17.B.7.	3 sf per linear ft of street façade width up to 150 sf	50 sf (one single-sided sign and two double-sided signs)	Yes
Penalty	ToJ LDR Section 2.2.17.B.7.	10% per projecting and freestanding sign		
8. Grading, Erosion Control, Stormwater				
Grading (Sec. 5.7.2.)				
Erosion Control (Sec. 5.7.3.)				
Erosion shall be controlled at all times	ToJ LDR Section 2.2.17.B.8.			Yes
Stormwater Management (Sec. 5.7.4.)				
No increase in peak flow rate or velocity across property lines	ToJ LDR Section 2.2.17.B.8.			Yes

9. Physical Development Permits Required (TS-2)							
Physical Development	**Sketch Plan (Sec. 8.3.1.)**	**Dev Plan (Sec. 8.3.2.)**	**Building Permit (Sec. 8.3.3.)**	**DRC Review (Sec. 8.2.6.)**	**Sign Permit (Sec. 8.3.5.)**	**Grading Permit (Sec. 8.3.4.)**	**Floodplain Permit**
Floor Area(sf)							
≤ 10,000			X	X		Sec. 5.7.1.	Sec. 5.4.4.
10,001-20,000		X	X	X		Sec. 5.7.1.	Sec. 5.4.4.
> 20,000	X	X	X	X		Sec. 5.7.1.	Sec. 5.4.4.
Sign					X	Sec. 5.7.1.	Sec. 5.4.4.

9. Physical Development Permits Required (DC-2)							
Physical Development	**Sketch Plan (Sec. 8.3.1.)**	**Dev Plan (Sec. 8.3.2.)**	**Building Permit (Sec. 8.3.3.)**	**DRC Review (Sec. 8.2.6.)**	**Sign Permit (Sec. 8.3.5.)**	**Grading Permit (Sec. 8.3.4.)**	**Floodplain Permit**
Floor Area (sf)							
< 19,500			X	X		Sec. 5.7.1.	Sec. 5.4.4.
19,500-39,500		X	X	X		Sec. 5.7.1.	Sec. 5.4.4.
> 39,000	X	X	X	X		Sec. 5.7.1.	Sec. 5.4.4.
> 39,000 for only res. use	optional	X	X	X		Sec. 5.7.1.	Sec. 5.4.4.
Sign					X	Sec. 5.7.1.	Sec. 5.4.4.

2.2.15.C-1. Allowed Uses (DC-2/TS-2)				2. Use Requirements	
Use	**Permit**	**Individual Use (max)**	**Density (max)**	**Parking (min) (Div. 6.2.) (E.1.)**	**Affordable Workforce Housing Units (min) (Div. 6.3.)**
Residential Uses					
Apartment (6.1.4.D.)	B	8,000 sf habitable excluding basement	NA	1/DU if < 2 bedrooms and < 500 sf; otherwise, 1.5/DU	0.000017 * sf + (Exp(-14.17 + 1.59*Ln(sf)))/2.176
Commercial Uses					
Office (6.1.6.B.)	B	NA	NA	1.65/1,000 sf	0.000247 * sf
Retail (6.1.6.C.)	B	12,500 sf excluding basement storage	NA	2.25/1,000 sf	0.000216 * sf
Service (6.1.6.D.)	B		NA	1.5/1,000 sf	0.000216 * sf

PLANNING & BUILDING DEPARTMENT

November 4, 2020

St. John's Episcopal Church
Attn: Jimmy Bartz and Robyn Reed
PO Box 1690
Jackson, WY 83002

RE: Final Letter
Item P20-162
Conditional Use Permit – 170 N. Glenwood Street

Dear Mr. Bartz:

This letter is to confirm on October 19, 2020 the Town Council ***approved*** an amendment to a condition of approval from a previously approved Conditional Use Permit to modify the landscape plan at the property located at 170 N. Glenwood Street, subject to the department reviews within the staff report dated October 19, 2020, and the following conditions:

1. Upon removal of the eleven Cottonwoods, the applicant shall plant the two Spruce trees, three Maple trees and shrubs/bushes by no later than June 1, 2021. The applicant shall replace the two Willows with three Ash trees no later than five years from the date of this approval.

2. Prior to removing any trees, the applicant shall provide a bond by this Friday, October 23rd to the Planning Department in the amount of 125% of the costs of the new trees and shrubs.

If you have any questions or need additional information, please contact me at 307-733-0440, ext. 1305.

Sincerely,

Tyler Valentine

Tyler Valentine
Senior Planner

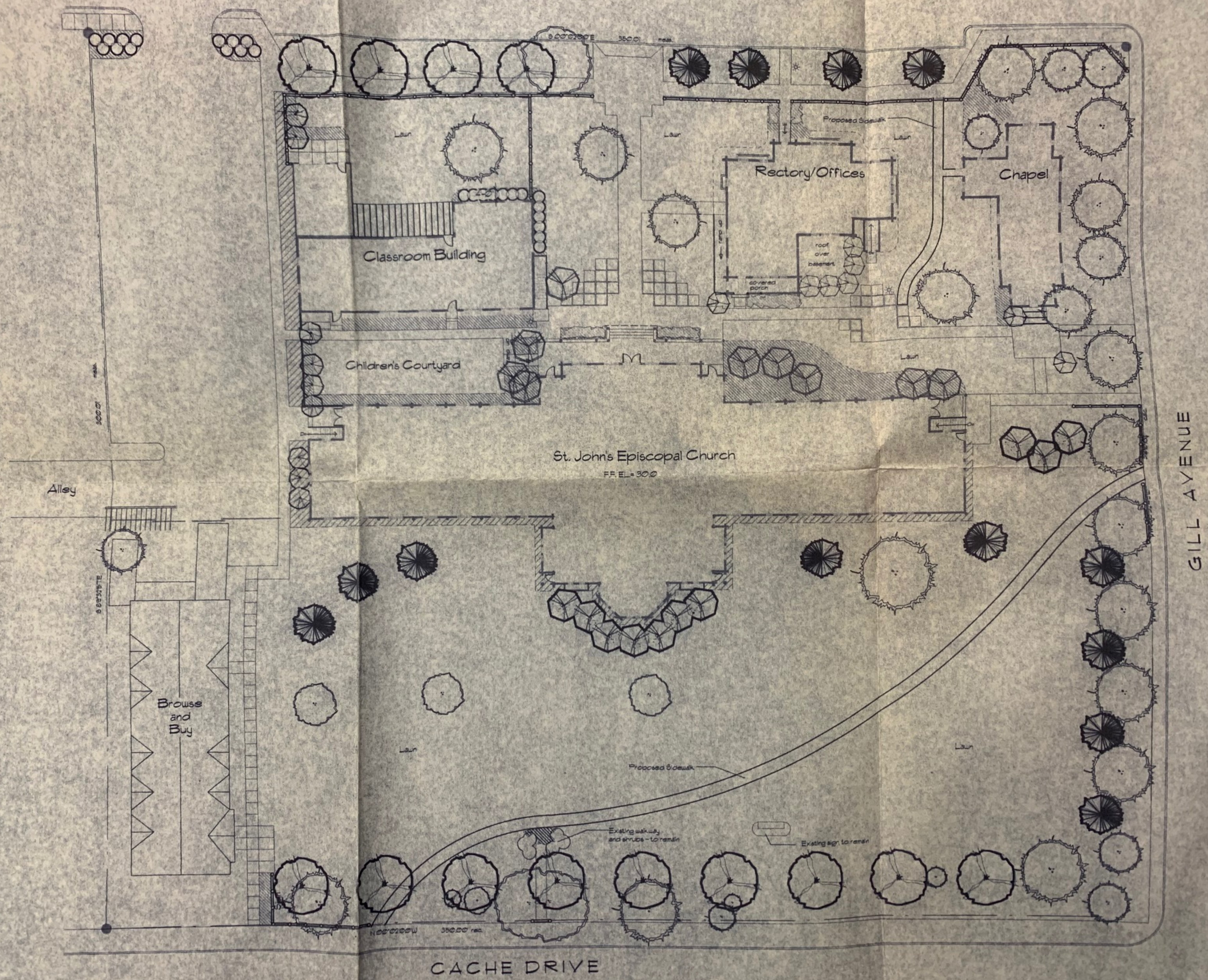
Classroom Building
Rectory/Offices
Chapel
Children's Courtyard
St. John's Episcopal Church
F.F. EL. = 30.0
Alley
Browse and Buy
Lawn
Proposed Sidewalk
Existing walkway and shrubs - to remain
Existing sign to remain
GILL AVENUE
CACHE DRIVE

Tyler Valentine

From: Robyn Reed <robyn@stjohnsjackson.org>
Sent: Friday, October 09, 2020 12:22 PM
To: Tyler Valentine
Subject: St. John's proposal

Hello Tyler,

After our conversations regarding our phased planting, we would like to amend the following.

The original phased plan

Phase 1 - plant two spruce trees in the Cache Street line of spruces following tree removal or as soon as seasonally possible.
Phase 2 - the following year, plant three maples and bushes around the labyrinth
Phase 3 - plant three ash trees after the completion of a Browse N Buy building/renovation

Amended phased plan

Phase 1 - plant two spruces trees in the line of spruces, three maple trees on the campus and bushes around the labyrinth immediately after tree removal or as soon as seasonally possible.

phase 2 - plant 3 ashes after the completion of the Browse N Buy rebuild/remodel with with the start date of this project not to exceed 5 years from the date of approval of the tree removal

Robyn Reed
Director of Operations
The Episcopal Church in Jackson Hole
PO Box 1690
170 N Glenwood St.
Jackson, WY 83001
(307) 733-2603 x 101

Katelyn Page

From: Tyler Valentine
Sent: Thursday, June 5, 2025 3:51 PM
To: Katelyn Page
Subject: St John's Landscaping

See below

From: Robyn Reed <robyn@stjohnsjackson.org>
Sent: Thursday, May 27, 2021 4:06 PM
To: Tyler Valentine <tvalentine@jacksonwy.gov>
Subject: Re: Item P20-162

Hello Tyler,

All of the trees have now been planted.

Robyn Reed
Director of Operations
The Episcopal Church in Jackson Hole
PO Box 1690
170 N Glenwood St.
Jackson, WY 83001
(307) 733-2603 x 101

On Thu, May 27, 2021 at 1:00 PM Tyler Valentine <tvalentine@jacksonwy.gov> wrote:

> Robyn, when those Spruce trees are planted, let me know so I can inspect. Then we can discuss releasing the full or partial bond.
>
> **From:** Robyn Reed <robyn@stjohnsjackson.org>
> **Sent:** Thursday, May 27, 2021 11:09 AM
> **To:** Tyler Valentine <tvalentine@jacksonwy.gov>
> **Subject:** Item P20-162

Hello Tyler,

I'm reaching out regarding the letter outlining St. John's Church obligation regarding replacement plantings after tree removal.

As per the letter, we were to plant 2 spruce trees, 3 maples, and shrubs by June 1. The shrubs and maples are planted and the spruce are on the property waiting to be planted. The letter further outlines the planting of 3 ash trees no later than 5 years from approval date.

What is the process for receiving our bond funds back. The Town of Jackson is holding $13,125.

Also, we decided to plant 4 spruce trees instead of only 2. We will be planting the ash trees at some point depending on the timing of the possible building project. Is it possible for the purpose of receiving bond funds back that the 2 additional spruce can be taken into consideration so that we could receive the full amount?

Thank you for your assistance.

Robyn Reed

Director of Operations

The Episcopal Church in Jackson Hole

PO Box 1690

170 N Glenwood St.

Jackson, WY 83001

(307) 733-2603 x 101